EXHIBIT NO. 1

23
6-17-06

~~19~~
~~6-13-06~~

City of Alexandria, Virginia

MEMORANDUM

DATE: JUNE 6, 2006

TO: THE HONORABLE MAYOR AND MEMBERS OF CITY COUNCIL

FROM: JAMES K. HARTMANN, CITY MANAGER

SUBJECT: CONSIDERATION OF AN ORDINANCE TO AMEND TITLE 4, CHAPTER 2 OF THE CITY CODE TO ADOPT CHANGES TO THE VIRGINIA STATEWIDE FIRE PREVENTION CODE

ISSUE: City Council consideration of an ordinance to amend Title 4, Chapter 2, of the Code of the City of Alexandria to adopt changes to the Virginia Statewide Fire Prevention Code.

RECOMMENDATION: That City Council pass this proposed ordinance (Attachment) on first reading and schedule it for public hearing, second reading and final passage on Saturday, June 17, 2006.

DISCUSSION: The Virginia Department of Housing and Community Development (DHCD) has adopted the new Statewide Building and Fire Code Regulations to be enforced throughout the State. The most significant change in these regulations is that they adopt the 2003 edition of the International Code Conference (ICC) Model Building and Fire Code Regulations. Unlike the Uniform Statewide Building Code (USBC), local jurisdictions may modify the Statewide Fire Prevention Code (SFPC) to make certain code provisions more restrictive to protect life and property at the local level.

For local jurisdictions to enforce the Virginia Statewide Fire Prevention Code they must first pass an ordinance to adopt the ICC/SFPC. If a jurisdiction chooses not to adopt the ICC/SFPC then enforcement reverts to the State Fire Marshal's Office. Historically, the City has adopted the SFPC since its inception in 1983, after making local modifications that are considered appropriate for the City's urban environment.

With the adoption by the State of the new ICC Fire Code, numerous changes are required to the City Code to realign chapters and section numbers. The majority of the changes to the SFPC will fall into this category.

Little has changed in the basics of the code. For the most part, as stated above, sections have been relocated to new areas within the City Code to reflect the changes necessitated by the move from the 2000 to the new ICC 2003 Model Code.

Several new operational permit requirement fees have been added to the list found in previous code editions. These new operation permit fees are highlighted by underlining the fee for each. These permits are valid for a period of 12 months from the date of issuance.

FISCAL IMPACT: The fees for the majority of fire prevention code permits are being proposed to be increased an average of 13%, from $88.50 to $100.00. One fee increased from $100.00 to $250.00 (Indoor Pyrotechnics). New fees are established for:

- Asphalt Kettles
- Torches for removing paint and sweating pipe

Some fees remain unchanged. In total these changes result in an estimated revenue increase of about $17,250.

ATTACHMENT: Ordinance

STAFF:
Art Dahlberg, Director, Code Enforcement
Gary Mesaris, Fire Chief

EXHIBIT NO. 2

Introduction and first reading:	6/13/06
Public hearing:	6/17/06
Second reading and enactment:	6/17/06

INFORMATION ON PROPOSED ORDINANCE

Title

AN ORDINANCE to amend and reordain Article B (FIRE PREVENTION) of Chapter 2 (FIRE PROTECTION AND PREVENTION), Title 4 (PUBLIC SAFETY), of The Code of the City of Alexandria, Virginia, 1981, as amended.

Summary

The proposed ordinance amends the city's fire prevention code to comply with changes in state law and regulations.

Sponsor

Fire Department
Bureau of Code Enforcement

Staff

Gary Mesaris, Fire Chief
Arthur Dahlberg, Director of Code Enforcement
Mary Elliott O'Donnell, Assistant City Attorney

Authority

§ 27-97, Code of Virginia, 1950, as amended

Estimated Costs of Implementation

None

Attachments in Addition to Proposed Ordinance and its Attachments (if any)

None

C:\Documents and Settings\jhenders\Local Settings\Temp\notesC9812B\FIRECOV06.wpd

EXHIBIT NO. 3

ORDINANCE NO. _____

AN ORDINANCE to amend and re-ordain Article B (FIRE PREVENTION) of Chapter 2 (FIRE PROTECTION AND PREVENTION), Title 4 (PUBLIC SAFETY), of The Code of the City of Alexandria, Virginia, 1981, as amended.

THE CITY COUNCIL OF ALEXANDRIA HEREBY ORDAINS:

Sec. 1.
That Article B of Chapter 2, Title 4 of The Code of the City of Alexandria, Virginia, 1981, as amended, be and the same hereby is amended and re-ordained to read as follows:

ARTICLE B

Fire Prevention

Sec. 4-2-11 Title.

This article shall be known as the Fire Prevention Code of the City of Alexandria, Virginia.

(1) Section 4-2-12, Adoption of Virginia Statewide Fire Prevention Code is amended to read:

Sec. 4-2-12 Adoption of Virginia Statewide Fire Prevention Code.

There is hereby adopted and incorporated as if fully set out in this article, the Virginia Statewide Fire Prevention Code, as promulgated in 2003 ~~2000~~ and as thereafter amended by the Virginia Board of Housing and Community Development, except such portions of the Virginia Statewide Fire Prevention Code as are deleted, modified or amended by section 4-2-21 of this article.

Sec. 4-2-13 Same - official copy

One copy of the Virginia Statewide Fire Prevention Code and the ordinances adopted deletions, modifications and/or amendments thereto shall be manually signed on its cover by the mayor and the fire official and shall be filed and kept at all times in the office of the city clerk.

Sec. 4-2-14 Definition of fire official, fire marshal and code official

Whenever the terms "fire official", "fire marshal" and code official" are used in this article or the Virginia Statewide Fire Prevention Code, they shall mean the city's Director of Code Enforcement.

(2) Section 4-2-15, Duties of the fire marshal and deputy fire marshals is amended by deleting and adding the following language in the title and sections A through D:

Sec. 4-2-15 Duties of the fire marshal, assistant fire marshals, deputy fire marshals and fire inspectors.

(a) The director of code enforcement ~~chief~~ fire marshal, ~~chief deputy~~ assistant fire marshals, all deputy fire marshals, all fire inspectors and other authorized employees of the city shall enforce the applicable provisions of this article.

(b) The city manager shall appoint the ~~chief~~ fire marshal, ~~chief deputy~~ assistant fire marshals, ~~and~~ deputy fire marshals and fire inspectors.

(c) The chief of the fire department of the city may designate any members of the fire department as deemed necessary as temporary fire inspectors to make fire safety inspections pursuant to this article.

(d) (1) The ~~chief~~ fire marshal, ~~chief deputy~~ assistant fire marshals and deputy fire marshals shall have the same police powers as a sheriff, police officer or law enforcement officer, and in addition to such other duties as may be prescribed by law, shall have the primary responsibility of investigation and prosecution of all offenses involving fire, fire bombings, bombings and attempts to commit such offenses; possession and manufacture of explosive devices, substances and fire bombs; storage, use and transportation of hazardous materials and hazardous wastes and the investigation of all releases of hazardous materials and wastes and all other environmental offenses; false alarms relating to such offenses, and may investigate and prosecute all other criminal or civil offenses under local, state or federal law arising out of or during the investigation of the enumerated offenses, and out of or during such other investigations, and prosecutions as may be approved by the city manager.

(2) The police powers granted in this section shall not be exercised by the ~~chief~~ fire marshal, ~~chief deputy~~ assistant fire marshals or any deputy fire marshal until such person has satisfactorily completed a course for fire marshals with police powers, designed by the Department of Fire Programs in cooperation with the Department of Criminal Justice Services and approved by the Virginia Fire Services Board.

(3) The ~~chief~~ fire marshal, ~~chief deputy~~ assistant fire marshals, and deputy fire marshals with police powers shall continue to exercise such powers only upon satisfactory participation in in-service and advances courses and programs designed by the Department of Fire Programs in cooperation with the Department of Criminal Justice Services, and approved by the Virginia Fire Services Board.

(4) The fire marshal, assistant fire marshals and deputy fire marshals shall have the authority to enforce the *Virginia Statewide Fire Prevention Code, Virginia Maintenance Code*, the *Uniform Statewide Building Code, Code of Virginia* and applicable sections of the *City of Alexandria Code.*

(3) Section 4-2-15.1 is added:

Sec.4-2-15.1 Duties of the Fire Inspectors

(a) The term "fire inspector" shall mean field personnel that have authority to conduct inspections, implements and enforces the *Virginia Statewide Fire Prevention Code, Virginia Maintenance Code*, and applicable sections of the *City of Alexandria Code.*

(b) The appointed fire inspector shall have the responsibility of issuing Virginia Uniform Summons and parking citations in accordance with the *Code of Virginia, Virginia Statewide Fire Prevention Code, Virginia Maintenance Code*, the *Uniform Statewide Building Code* and applicable sections of the *City of Alexandria Code*. Fire Inspectors shall not be granted police powers or implement custodial arrests. The powers granted in this section shall not be exercised by the fire inspectors until such person has satisfactorily completed a course for fire inspectors with summons powers,

designed by the Department of Fire Programs in cooperation with the Department of Criminal Justice Services and approved by the Virginia Fire Services Board.

Sec. 4-2-16 Unlawful boarding or tampering with fire department vehicles.

It shall be unlawful for any person, without proper authorization to cling, attach to, climb upon or board or swing upon any fire department vehicle, whether the vehicle is in motion or at rest, to sound any warning device thereon or to manipulate, tamper with or destroy any lever, valve, switch, starting device, brake, pump or any equipment, protective clothing or tool or a part of the fire department vehicle.

(4) Section 4-2-17, Tampering with fire protection devices; failure to report, or delay alarm for fire is amended by adding the following language and Item D:

Sec. 4-2-17 Tampering with fire protection devices; failure to report, or delaying alarm of fire.

(a) It shall be unlawful for any person to tamper with, damage, destroy, use without just cause or authorization, or to hinder the use of any fire alarm system, fire detection system, fire suppression system, fire protection system, or fire extinguisher installed in any building or any structure within the city.

(b) It shall be unlawful for any person knowingly to delay or cause to be delayed an alarm of fire, or to fail to report an alarm of fire to the fire department.

(c) When a fire or evidence of the occurrence of a fire is discovered, even though it has apparently been extinguished, the person making such discovery shall immediately report the same to the fire department.

(d) It shall be unlawful for any person to reset any fire protection system without prior authorization from the director of code enforcement or his designees. However, the following persons are excepted from this requirement: (1) Fire suppression personnel, (2) Fire protection personnel conducting inspection, testing, service or maintenance on fire protection system during emergencies, and (3) Law enforcement personnel

(5) Section 4-2-17.1, Stairway Identification is amended to read:

Sec. 4-2-17.1 Stairway Identification.

An identification system as approved by the fire official shall be provided at each landing in all interior exit stairways connecting more than three stories, identifying the floor level, the level of discharge to the exterior of the structure, the name of designation of the stairway within the structure, and whether there is access to the roof of the structure from the stairway. The identification shall be located five feet (1,525 mm) above the finished floor landing, at a location, which is readily visible within the stairway and will not be obstructed by the operation of any door into the stairway.
Stairway identification shall conform to the requirements established in Sec. 4-2-21, Changes in Virginia Statewide Fire Prevention Code, Chapter 1, section 103.4, ~~103.3,~~ Appendix D, "Requirements for Stairway Identification".

(6) Section 4-2-18, Fire Hydrant and Water mains is amended as follow:

Sec. 4-2-18 Fire Hydrant and water mains.

~~(a) It shall be unlawful for any person to reset any fire protection system without prior authorization from the director of code enforcement or his designees.~~

~~Exceptions: (1) Fire suppression personnel~~
~~(2) Fire protection personnel conducting inspection, testing, service or maintenance on fire protection system during emergencies.~~
~~(3) Law enforcement personnel~~

(a) It shall be unlawful for any person to use, tamper with, damage or destroy any fire hydrant, valve or water main within the city, except that the fire department may use fire hydrants for fire fighting or training purposes, and persons who have obtained a permit as provided for in this section from the Code Enforcement Bureau ~~fire marshal~~ may use the hydrants in accordance with the terms of the permit.

(b) Application for a permit for use of fire hydrants shall be made to the Code Enforcement Bureau on forms provided for this purpose. Any permit shall be subject to the conditions and specifications imposed by the Code Enforcement Bureau ~~fire marshal~~ for the purpose of protection equipment and preventing water leakage. No permit shall be issued unless approval to use water shall first have been obtained for the Virginia-American Water Company. A separate permit shall be required for each hydrant used and each time the hydrant is used. A fee of $100.00 ~~$88.50~~ ($10 for charitable or nonprofit groups) will be charges for each permit issued in accordance with Table 107.2. A permit holder shall be responsible for the costs of labor and materials for any repair or replacement needed after hydrant use. A permit must be in the possession of the actual user at the time of use.

(c) No person shall plant, erect or place any obstruction within four feet of any hydrant nor shall a person stop, stand or cause a motor vehicle to be placed within 15 feet of a hydrant.

(d) No person shall plant erect or place any obstruction within 4 feet of any other fire department connection point, whether mounted on the exterior of a structure of freestanding. All such connections, which are mounted on a building shall be identified by a sign. ~~including all such connections in existence on January 26, 2002, shall be identified by a sign as follows. Such signs shall bear the letters FDC, six inches in height, of a white color on a red background, and shall be mounted directly above the connection, four feet above the top of the connection.~~

Sec. 4-2-19 Impersonation.

It shall be unlawful for any person falsely to use a fire department badge, uniform or credentials to identify himself as, or otherwise to impersonate a fire marshal, a fire officer, a fire fighter, a paramedic, an inspector or another authorized representative of the fire department.

Sec. 4-2-20 Reserved.

Sec 4-2-21 Changes in Virginia Statewide Fire Prevention Code.

The Virginia Statewide Fire Prevention Code, adopted by the city in section 4-2-12, is deleted, modified, or amended in the following respects:

(1) Chapter 1, section 101.1 is amended by deleting and adding the following:

101.1 Title. The regulations set forth herein, as modified and amended in Section 4-2-21 of The Code of the City of Alexandria, together with the additional regulations in article B of chapter 2, title 4 of that code, shall be known as the Fire Prevention Code of the City of Alexandria, Virginia, and are herein referred to as such or as "the code".

(2) Chapter 1, section 103 is amended by adding the following:

103.4. International Fire Code Appendices. IFC, 2003 Edition, Appendices A, B, C, D, and F are deleted. Appendix H is added. The following appendices are hereby incorporated as fully enforceable provisions of this code:

(3) Appendix A, Water and Fire Requirements for Site Plans and New Construction is amended and by deleting and adding the following:

APPENDIX A- WATER AND FIRE REQUIREMENTS FOR SITE PLANS AND NEW CONSTRUCTION

~~**APPENDIX A**~~

~~**WATER AND FIRE REQUIREMENTS FOR SITE PLANS AND NEW CONSTRUCTION**~~

SECTION A101 - GENERAL

A101.1 Scope. Appendix A, Water and Fire Requirements for Site Plans and New Construction provides specific information concerning various fire protection related issues including, fire hydrant and fire main requirements, site plan requirements, emergency vehicle access and easements (emergency vehicle easement requirements), and fire flow calculations. In addition, this document provides information concerning fire department construction site requirements, hydrant permits and acceptance of emergency vehicle easements from the public.

A101.2 References. *Code of Virginia, Uniform Statewide Building Code, Statewide Fire Prevention Code with City of Alexandria amendments, Design and Construction Standards - Department of Transportation and Environmental Services, and Virginia-American Water Company Specifications for Pipeline Installation and Street Restoration.*

A101.3 Alternatives. Alternative approaches to these requirements will be considered on a case-by-case basis and are subject to the review and approval by the Director of Code Enforcement.

SECTION A102 - FIRE FLOW REQUIREMENTS

A102.1 Fire Flow Requirements. Fire flow requirements shall be based on the methodology

described in the Insurance Services Office's (ISO) Fire Suppression Rating Schedule. This methodology considers building construction, occupancy, adjacent exposed buildings and communication paths between buildings. (See Section A102.10 - Fire Flow Analysis for guidance)

A102.2 One and Two Family Dwellings. The fire flow required shall be based on the minimum exposure distance listed in Table A102.1:

Table 102.1 - MINIMUM EXPOSURE DISTANCE

Minimum Exposure Distance	Fire Flow (GPM)
0 ft. - 10 ft.	1,500 - 2,000
11 ft. - 30 ft.	1,000 - 1,500
31 ft. and greater	- 1,000

A102.3 Townhouses or Mulitplex Units. Townhouses or multiplex units (residential or professional) where individual units are not separated by two-hour fire, party, or separation walls require a flow of 2,500 GPM. Townhouses (residential or professional) where individual units are separated by a minimum one-hour fire, party or separation walls and approved fire sprinkler systems establish fire flow requirements based on calculations for **Other Uses** as described in Section A102.4. Multiplex units (residential or professional) where individual units are separated by two-hour fire, party, or separation walls and approved fire sprinkler systems establish fire flow requirements based on calculations for **Other Uses** as described in Section A102.4.

Note: The Code Enforcement Bureau reserves the right to increase the required fire flow if building construction issues or access factors present an unusual fire or life safety challenge.

A102.4 Other Uses. Fire flow requirements established by the procedures and formula for needed fire flow delineated below is based on the Insurance Services Office (ISO) methodology.

A102.5 Computation of Needed Fire Flow. The needed fire flow shall be calculated at a minimum 20-psi residual pressure on the water system.

The basic formula is: $NFFi = (Ci)(Oi)(X + P)i$

Ci = Construction factor where: $Ci = 18F - \sqrt{Ai}$

F = coefficient related to type of construction:

- F = 1.5 for wood frame construction (2003 ~~2000~~ VUSBC Types VA & VB)
- F = 1.0 for ordinary construction (2003 ~~2000~~ VUSBC Types IIIA& IIIB)
- F = 0.9 for heavy timber construction (2003 ~~2000~~ VUSBC Types IV)
- F = 0.8 for noncombustible construction (2003 ~~2000~~ VUSBC Types IIA and IIB)
- F = 0.6 for fire-resistive construction (2003 ~~2000~~ VUSBC Types IA and IB)

A (effective building area) = the total area of the largest floor plus:

- Construction type I & II -25% of the area not exceeding the other two largest floors when

all vertical openings have at least 1 ½ -hour fire-rated protection.

or,

- 50% of the area not exceeding eight other floors when the vertical openings are unprotected or have less than 1 ½-hour protection.

- Construction Type III through V - 50% of all other floors.

NOTE: In buildings with mixed construction a value Cm shall be calculated for each class of construction using the effective area of the building. The Cm values are multiplied by their individual percentage of the total area. The Ci applicable to the entire building is the sum of these values. However, the value of the Ci shall not be less than the values for any part of the building based upon its own construction and area.

Oi = Occupancy Factor, which reflects the combustibility of the occupancy.

- = 0.75 for non-combustible
- = 0.85 for limited combustible
- = 1.00 for combustible
- = 1.15 for free burning
- = 1.25 for rapid burning

(X + P)i - Exposure and Communication Factors

$(X+P)i = 1.0 + (Xi + P_i)$ (with a maximum value of 1.60)

Values for X and P are determined from Tables A102.3 and A102.4 containing factors for type of separation or connections and separation distance. (See Section A102.10 - Example Fire Flow Calculation for guidance).

Add 500 gpm to total fire flow for buildings with wood construction members, sheeting, shingles, or roof.

A102.6 Minimum Flow. Fire flow shall never be less than 500 gpm for a structure. Fire flow required for single-family detached dwellings shall never be less that 1,000 gpm. Both values are absolute minimums after all reductions are taken.

A102.7 Maximum Flow. The maximum fire flow shall be as listed in Table A102.2, except for structures requiring special consideration as described in Section A102.8.

TABLE 102.2 - MAXIMUM FLOW

Construction Type	Flow in gpm
III, IV, or V	8,000
I or II	6,000

A102.8 Reductions Based on Sprinkler Protection. The value obtained from the formula in Section A102.5, COMPUTATION OF NEEDED FIRE FLOW, may be reduced by 50 percent when the structure under consideration is protected throughout with an approved automatic sprinkler system in accordance with the *Virginia Uniform Statewide Building Code* and the currently referenced edition of NFPA 13 *Standards for the Installation of Sprinkler Systems* or other approved fire sprinkler system design and installation codes. Reductions are not permitted for structures with partial protection. Reductions for installations based on NFPA 13D or NFPA 13R designs, shall be approved by the Director of Code Enforcement on a case-by-case basis.

A102.9 Special Consideration. The above calculation procedures do not apply to the following, which require special consideration and direct consultation with the Code Enforcement Bureau:

a. Structures containing a group H fire area
b. Lumber yards
c. Petroleum Storage
d. Refineries
e. Chemical plants
f. Grain storage
g. Power generating facilities
h. Hazardous manufacturing processes
i. Paint, flammable liquid storage
j. High plies combustible storage

TABLE A102.3
FACTOR FOR EXPOSURE (Xi)

Factor for exposure (Xi): The factor for (Xi) depends upon the construction and length-height valve (length of wall in feet, times height in stories) of the exposed building and the distance between facing walls of the subject building and exposed building and shall be selected from table A102.3 below.

			Construction of facing Wall of Exposed Building Classes			
Construction of Facing Wall of Subject Building	Distance in Feet to the Exposed Building	Length-Height of Facing Wall of Exposed Building	3,5	1, 2, 4		
				Unprotected Openings	Semi-Protected Openings (wired glass or outside open sprinklers)	Blank Wall
Frame, Metal or Masonry with Openings	0-10	1-100	0.22	0.21	0.16	0
		101-200	0.23	0.22	0.17	0
		201-300	0.24	0.23	0.18	0
		301-400	0.25	0.24	0.19	0
		Over 400	0.25	0.25	0.20	0
	11-30	1-100	0.17	0.15	0.11	0
		101-200	0.18	0.16	0.12	0
		201-300	0.19	0.18	0.14	0
		301-400	0.20	0.19	0.15	0
		Over 400	0.20	0.19	0.15	0
	31-60	1-100	0.12	0.10	0.07	0
		101-200	0.13	0.11	0.08	0
		201-300	0.14	0.13	0.10	0
		301-400	0.15	0.14	0.11	0
		Over 400	0.15	0.15	0.12	0
	61-100	1-100	0.08	0.06	0.04	0
		101-200	0.08	0.07	0.05	0
		201-300	0.09	0.08	0.06	0
		301-400	0.10	0.09	0.07	0
		Over 400	0.10	0.10	0.08	0
Blank Masonry Wall	Facing wall of the exposed building is higher than subject building: Use the above table EXCEPT use only the length-height of facing wall of the exposed building ABOVE the height of the facing wall of the subject building. Buildings five stories or over in height, consider as five stories. When the height of the facing wall of the exposed building is the same or lower than the height of the facing wall of the subject building, Xi=0.					

TABLE A102.4
FACTOR FOR COMMUNICATIONS (Pi)

The factor for Pi depend upon the protection for communicating party-wall openings and the length and construction of communications between fire divisions and shall be selected from Table A102.4. When more than one communication type exists in any one side wall, apply only largest factor Pi for that side. When there is no communication on a side, Pi =0. (+ For over 50 feet, $P_i = 0$)

Description of protection off passageway opening	Fire Resistance, Non-Combustible or Slow-Burning Communications				Communications with Combustible Construction					
					Open			Enclosed		
	Any Length	10 ft. or Less	11 ft to 20 ft.	21 ft. to 50 ft. +	10 ft. or Less	11 ft to 20 ft	21 ft. to 50 ft. +	10 ft. or Less	11 ft. to 20 ft.	21 ft. to 50 ft.+
Unprotected	0	0.40	0.30	0.20	0.30	0.20	0.10	0.50	0.40	0.30
Single Class A Fire Door at One End of passageway	0	0.20	0.10	0	0.20	0.15	0	0.30	0.20	0.10
Single Class B Fire Door at One End of Passageway	0	0.30	0.20	0.10	0.25	0.20	0.10	0.35	0.25	0.15
Single class A fire door at each end or double class A fire doors at one end of passageway	0	0	0	0	0	0	0	0	0	0
Single class B fire door at each end or double class B fire doors at one end of passageway	0	0.10	0.05	0	0	0	0	0.15	0.10	0

Note: When a party wall has communicating openings protected by s single automatic or self-closing Class B fire door, it qualifies as a division wall for reduction of area. Where communications are protected by a recognized water curtain, the value of P_i is 0.

A102.10 - EXAMPLE FIRE FLOW ANALYSIS

A new cinema building will be constructed and has a footprint area of 77,680 square feet and a gross area of 134,320 square feet. The building is three stories, type 1B construction and is classified as use group A1 for theaters with the ground floor primarily movie theater seating. To the west of the proposed cinema is a hi-rise office building approximately 85 feet away. To the north and south there is on grade parking and no structure within 100 feet. To the east there is a future structure planned and it will be within 30 feet of the cinema. All vertical openings are unprotected or have less than one ½ hour fire rated protection. The facility will have full fire sprinkler protection based on the NFPA 13 standard.

Needed Fire Flow - NFFi = (Ci)(Oi)(X + P)i

(1) Ci = Construction Factor where Ci = 18 F √Ai

F = coefficient related to type of construction:

• F = 0.6 for fire-resistive construction (2003 ~~2000~~ VUSBC Types IA & IB)

A = effective building area - the total area of the largest floor plus 50% of the area not exceeding eight floors when all vertical openings are unprotected or have at least a 1 ½ hour fire rated protection for Construction type I and II

A = 77,680 + (134,320 - 77,680) x .50 = 106,000 square feet.

C = 18 x .6 x √ 106,000 - 3516 gpm

(2) Oi = Occupancy Factor, which reflects the combustibility of the occupancy.

- O = 1.15 for free burning based on a conservative design approach from undetermined plastic and fabric seating fixtures.

(3) (X + P)i = Exposure and Communication Factors from Tables A102.3 and A102.4. Values for X and P are determined from charts containing factors for type or separation or connections, separation distance.

(Xi + Pi) = 1.0 + (Xi+ Pi) = 1.0 + (0.10 = 0.0 + 0.19 + 0.0) = 0 = 1.29
west north east south

Needed Fire Flow = (C) x (O) x 1 + Xi + Pi) = 3,516 x 1.15 x 1.29 = 5250 gpm

Note: 50% reduction available since a full NFPA 13 sprinkler system will be installed. Therefore:

NFFi = 5250 x 0.50 = 2,625 gpm = 2,750 (rounding to the nearest 250 gpm increment)

SECTION A103 - SITE PLAN INFORMATION

A103.1 Site Plan Requirements. The following information shall be provided on site plans:

1. Submitter name, address, telephone number
2. Building name and address
3. Edition of the building code (*Virginia Uniform Statewide Building Code*), occupancy classification, use group and type of construction.
4. Height of building in feet and stories
5. Foot print area of building and gross floor area of building.
6. Identification of fire walls, fire barriers, other fire separations with hourly rating.
7. Existing and proposed water and fire main locations and sizes.
8. Existing and proposed fire hydrants locations size of pipe, and expected flow and pressure.
   Note: Fire Hydrant Coverage and Location.
   (a) Minimum 40-foot clearance from hydrant to any structure.
   (b) Maximum 100 feet from hydrant to fire department connection.
   (c) Fire hydrant coverage: 300 feet, measured from the hydrant to the most remote point of vehicular access on the site, via the vehicular travel path.
   (d) Dead-end water main to fire hydrant distance:
   6" line 380 feet max. distance
   8" line 1,550 feet max. distance
   10" line 4,600 feet max. distance
   12" line 11,150 feet max. distance
   (e) No obstructions within 4 feet of hydrant (plants, fences, retaining walls, etc.)
   (f) Fire hydrants and water mains in or on parking structures shall be protected from freezing, but no heat tape permitted.
   (g) Fire hydrant location for single-family dwellings: lot line and/or curve of pavement
9. State if a full or partial fire sprinkler system will be installed.
10. If fire sprinkler system will be installed, show location of fire department siamese connections(s).
    Note: Siamese shall be located on street front, address side of building but provide additional siamese for buildings five stories or 50 feet or greater, on the other side of the building. Siamese connection shall be visible and accessible with no obstructions within 4 ~~10~~ feet.
11. Topographical map relating grade and elevation to fire department connections.
12. Available water pressure and flow capacity, static pressure, residual pressure, flow in gpm.
13. Calculate required fire flow and indicate available fire flow at 20 psi per Insurance Services Office (ISO) methodology as described in this document.
14. Location of all Emergency Vehicle Easements (EVE) and locations of EVE signs. ~~outlining EVE minimum 22 feet.~~
15. Adequate emergency vehicle access, turning radii.
    Note: (a) Buildings more than 5 stories or 50 feet in height require ladder truck access on the two longest opposing sides with 100% of those respective sides accessible to the fire department.
    (b) Dead-end emergency vehicle easements greater than 100 feet require turnaround.
    (c) Emergency vehicle access to within 100 feet of main entrance.
    (d) Swimming pool access - to be within 50 feet of edge of pool.
    (e) Show all overhangs and obstructions to emergency vehicle easement. The minimum emergency vehicle clearance for canopies, overhangs, and obstructions ~~etc.~~ is 15 feet.
    (f) Design live load for emergency vehicle on parking structure, deck shall conform at a minimum to A.A.H.S.T.O. Loading Standard HS-20.
16. Check VUSBC Table 503 for area and height requirements

SECTION A104 - FIRE HYDRANTS

A104.1 Fire Hydrant Requirements. Hydrants shall be Mueller "Centurion" (Catalog #A-423) provided with a 6-inch connection to the water main. The hydrant shall have on 1- ½ inch pentagon-operating nut, left turn to open, two 2- ½ inch NSH nipple outlets capped, and one 4-inch NSH nipple outlet capped. The hydrant shall be connected to a Mueller Gate Valve (Catalog #A2360-2 ~~2380-2~~ or Virginia American Water Company approved equivalent) by the 6 inch water supply line and have a minimum 5 1/4 inch valve opening with 6 inch mechanical joints as shown in Figure A104.1 - *Fire Hydrant Installation Specifications.* Additional requirements are as follows:

1. The hydrant shall be supported by hard, compacted block with hard gravel bedding.
2. Fire hydrant branch connections placed in fill material shall be installed using restrained joint pipe or tie rods as approved by Virginia-American Water Company.
3. The hydrant shall be located so that the thrust block is placed in undisturbed soil. Where this is not practical, the soil beneath the surrounding thrust block shall be compacted to 95% of maximum density in accordance with VDOT Sections 523.03, 302, 303.10 and 200.02.
4. The hydrant shall be plumb and the center of the hydrant (4-inch nozzle cover) shall be a minimum of 18 inches and maximum of 24 inches from the top face of the curb.
5. Excavation shall contain one ton of coarse washed gravel around base of hydrant for drainage.
6. The bottom of the safety flange shall be 2 ½ inches above the edge of the shoulder on streets without curb and gutter and 2 ½ inches above the elevation of curb on streets with curb and gutter.
7. Bends in underground piping shall be rodded and blocked.
8. Laterals shall be equipped with shut-off valves at tees or tapping sleeves. Valves shall be secured by rods or bolts, to tees or mains. Valves shall be equipped with standard two-inch square operating nuts and valve boxes with covers. Valves shall have right hand closure.
9. All hydrant branches shall have a minimum cover of four feet at the ditch line.
10. Public hydrants shall be painted with rust inhibitive primer and exterior enamel in the following color(s): Sherwin Williams "Safety Yellow" #B54Y37 for barrels and Sherwin Williams "Pure White" #B54W101 for hydrant bonnets and caps. **Exception:** Public hydrant barrels may be painted with an approved flat black paint where such locations are specifically approved in writing by the Fire Chief. Private hydrant ~~barrels, bonnets and caps~~ shall be painted with a rust inhibitive primer and exterior enamel Sherwin Williams "Safety Yellow" #B54Y37 for the barrels and bonnets and Sherwin Williams "Pure White" #B54W101 for the caps only. **Exception:** Private hydrant barrels may be painted with an approved flat black where such locations are specifically approved in writing by the Fire Chief.
11. Code Enforcement Bureau personnel shall witness all flushing, perform visual inspection, hydrostatic and flow testing of all public and private hydrants by a licensed contractor. Code Enforcement personnel shall confirm the hydrant meets the 100% design flow requirement. If the contractor brings the hydrant into compliance with the 100% design flow requirement.
12. Sidewalks shall be wrapped around hydrants located in areas where the grass area is shown as two feet or less.
13. Easements shall be required for hydrants located in ditch section streets where there is less that five feet clearance from hydrant to the property line.
14. Hydrants shall be installed, either five feet from the point of curvature of curb returns or on the property line in subdivisions.
15. Fire hydrants shall be located at least 40 feet from all buildings served by the hydrant. When a hydrant cannot be placed at the required distance, the Director of Code Enforcement will consider exceptions to the requirement if the conditions are within the parameters listed in the currently adopted edition of NFPA 24, *Installation of Private Fire Service Mains and their Appurtenances.*
16. No plantings or other obstructions shall be located within four feet of any hydrant or ~~ten feet or a~~ fire department siamese connection.
17. Four-inch steel pipe bollards shall be installed in accordance with the requirements of Figure A104.2

Fire Hydrant Protection Pipe Bollard Installation detail around hydrants as needed for industrial and commercial developments where curbs are not available and in locations where the potential for damage is greater than normal due to vehicular traffic as determined by the Director of Code Enforcement. Bollards shall be located adjacent to the hydrant and in such a manner as not to interfere with the ability to connect hoses or operate the hydrant. Where possible, bollards shall be at least 30 inches from the center of the hydrant-operating nut in all directions. The bottom of the bollards and encasement shall not be located above the hydrant supply piping and valve or within the area of the hydrant supply piping to prevent the possibility of damage to the underground piping should the bollard be displaced by vehicular contact. Exact locations of bollards will be determined by the engineer of record and approved by the Director of Code Enforcement.

18. Where standpipes or sprinkler systems are provided within buildings, a fire hydrant shall be located within 100 feet of the fire department siamese connection. Where possible and practical, the fire hydrant shall be located on the same side of the street as the fire department siamese connection if the hydrant does not violate the minimum distance from all buildings requirement in Item 17.

19. All fire hydrants shall be located so the maximum distance measured from the hydrant to the most remote point of vehicular access on the site is 300 feet.

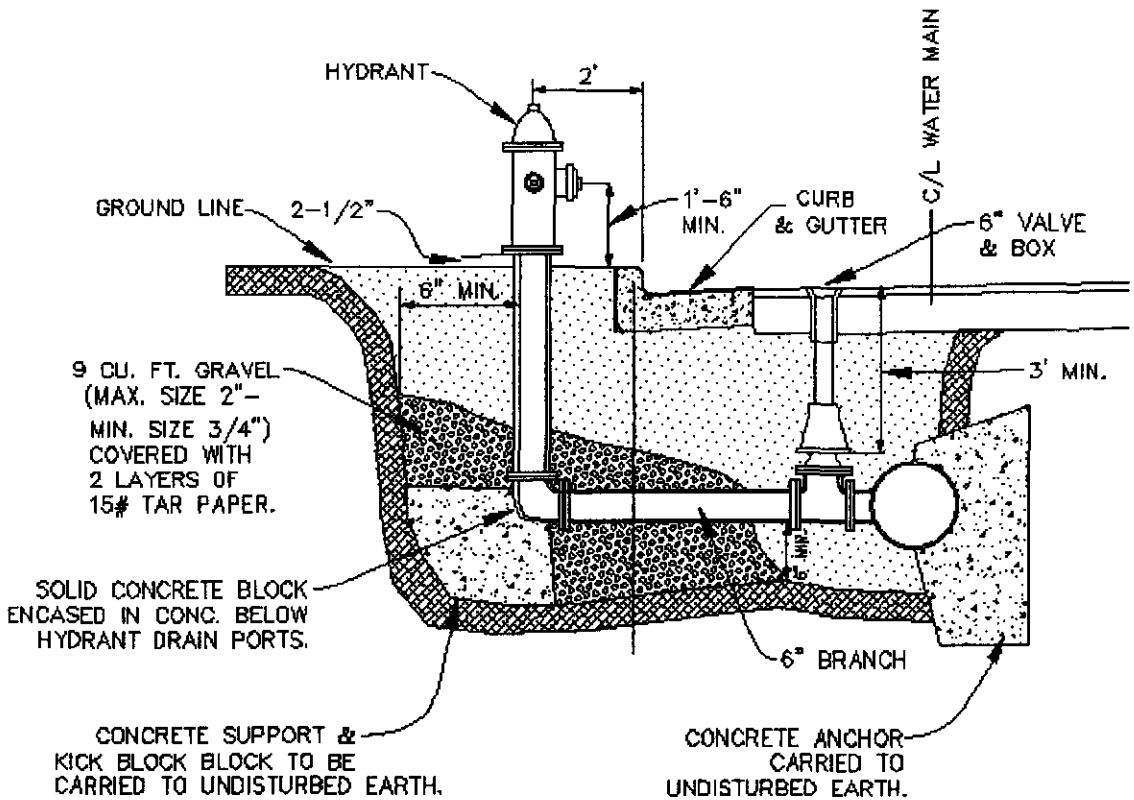

FIGURE A104.1 FIRE HYDRANT INSTALLATION SPECIFICATIONS

NOTES

1. FIRE HYDRANT: MUELLER CENTURION – CATALOG " A423 WITH 1-1/2 INCH PENTAGON OPERATING NUT; LEFT TURN TO OPEN TWO 2-1/2" HOSE NOZZLES AND ONE 4" HOSE NOZZLE.
2. VALVE: MUELLER GATE VALVE – CATALOG # A2380-20, WITH 6 INCH MECHANICAL JOINTS. 2 INCH SQUARE NUT, LEFT TURN TO OPEN.

FIGURE A104.2 FIRE HYDRANT PROTECTION
PIPE BOLLARD DETAIL

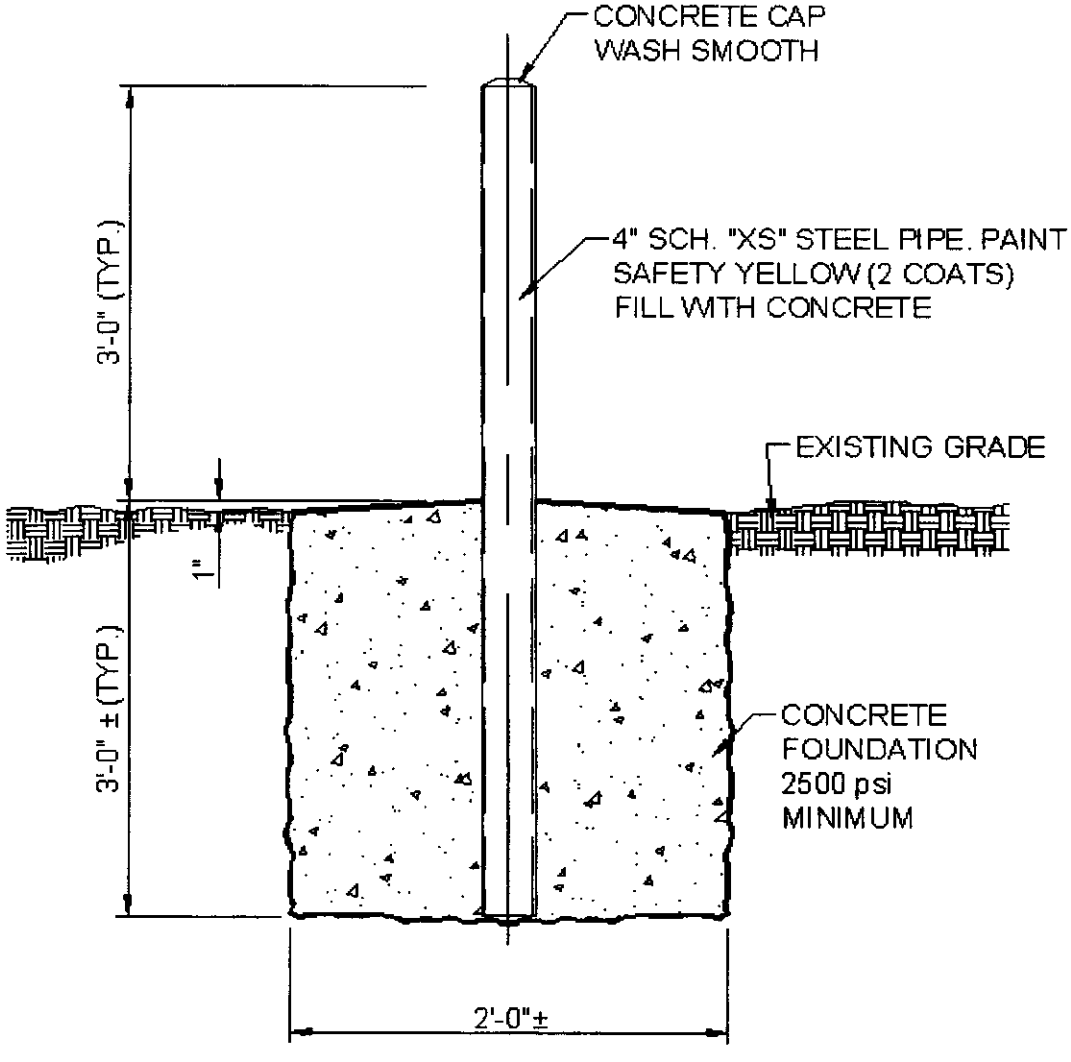

SECTION A105 - INSTALLATION AND TESTING OF UNDERGROUND FIRE MAINS AND FIRE LINES

A105.1 Fire Main and Fire Lines Requirements. All installation and testing shall be in accordance with the currently referenced edition of NFPA 24, *Private Fire Service Mains and Their Appurtenances*, as referenced by the *Virginia Uniform Statewide Building Code*. A Contractors Material and Test Certificate for Underground Piping, (see NFPA 24 appendix) shall be completed and signed by the installing contractors. A Code Enforcement Bureau inspector shall witness all required inspections and tests.

A105.2 General Requirements. The following general requirements shall be followed when installing fire main and fire lines:

1. Fire lines shall have at least four (4) feet of ground cover from the top of the pipe.
2. All bends and tees shall be provided with thrust blocks in accordance with NFPA 24.
3. All rods shall be a minimum of 5/8 inch in diameter. The number of rods shall be determined by the pipe size.
4. All rods , nuts, bolts, washers, clamps and other restraining devices shall be cleaned and thoroughly coated with bituminous or other acceptable corrosion-retarding material.
5. Thrust blocks shall be placed against undisturbed soil. Pipe clamps and tie-rods, thrust blocks, locked mechanical or push-on joints, mechanical joints utilizing set screw retainer glands, or other approved methods or devices shall be used. The type of pipe, soil conditions and available space shall determine the method.
6. When using clamps, rods shall be used in pairs, two to each clamp.
7. Fire lines shall not run under buildings.
8. All pipe shall be hydrostatically tested and visually inspected before being covered. The trench shall be backfilled between joints before testing to prevent movement of pipe.
9. The hydrostatic test of 200 psi or 50 psi over static pressure, whichever is higher shall be conducted for two (2) hours.
10. The contractor shall remain responsible for locating and correcting any leakage. If pipe is covered, no drop in pressure during the hydrostatic test is permitted.
11. Gauges used in performing acceptance tests shall meet the following:
    (a) Gauges shall be appropriate for the type of test (i.e., air gauge for air pressure test, water gauge for hydrostatic test.
    (b) Air gauges shall have increments of two (2) pounds or less. Water gauges shall have increments of ten (10) pounds or less.
    (c) The gauge shall be capable of registering pressures above the minimum pressure required during the test. The pressure registered during the actual test shall be at least the minimum required for the test and less than the maximum of the gauge register. Gauges shall be marked as accepted by UL or FM testing laboratories. No valves shall be installed in a fire line between the street valve at the water main and the OS&Y valve inside the building.
12. All fire lines shall be thoroughly flushed with an opening the same size as the pipe.
    The minimum rate of flow shall be not less than the water demand rate of the system, which is determined by the system design, or not less than that necessary to provide a velocity of 10 feet per second, whichever is greater. The flushing operation shall continue for sufficient time to ensure thorough cleaning.

TABLE A105.1 - FLOW RATES

Pipe Size (inches)	Flow Rate (gpm)
4	390
6	880
8	1560
10	2440
12	3520

13. When the above flow rate cannot be verified or met, supply piping shall be flushed at the maximum flow rate available to the system under fire conditions.
14. Approved site plans showing the size and location of pipe shall be on the job site before the inspection or test is performed.
15. Galvanized spool piece (potable water). The procedure for installing a galvanized pipe between the ductile iron fire line and the OS&Y valve is as follows:
    (a) If a spool piece is used between the fire line stub and the OS&Y valve to raise the valve off the fire line stub, then it shall be galvanized pipe. This spool may be hydrostatically tested as part of the underground, or part of the sprinkler riser.

- or -

    (b) If the OS&Y valve is rated by the AWWA as suitable for connection to a potable water system, this valve is a suitable transition piece between the fire line stub and the check valve. This OS&Y valve may be attached directly to the fire line stub if there is adequate clearance for proper operation of the valve, and then no galvanized pipe is required.

16. All items shall be inspected before any backfill.
17. Electrical ground wires shall not be connected to underground fire lines.
18. Backfill shall be well tamped, free of rocks and construction debris and free of corrosives.

SECTION A106 - EMERGENCY VEHICLE ACCESS

A106.1 Requirements. The following requirements shall be followed when designing emergency vehicle access:

1. Access for emergency vehicles shall be provided to within 100 feet of the main or principal entrance to every building. The access shall be provided by a public or private street parking lot.
2. When new buildings are more than five stories or 50 feet in height, ladder truck access shall be provided on the two longest opposing sides with 100% of those respective sides accessible to the fire department.
3. The access to the rear my be provided by either a street, parking lot or emergency vehicle easement designed to all appropriate standards.
4. The inner surface of the ladder truck access way shall be no less than 15 feet and no more than 30 feet from the exterior building wall.
5. Where required, emergency vehicle easements shall have a minimum width of 22 feet.
6. Required fire department access ways over 100 feet in length shall have provisions for turning apparatus around according to the requirements referenced in Figure A106.1 for emergency vehicle easements in this document.
7. A 12-foot wide access lane to within 50 feet of the edge of the swimming pools, with an eight-foot wide personnel gate in the fence at the point of access is required except for individually owned pools located on single-family lots.
8. Building overhangs which cross an emergency vehicle easement threshold shall not be occupied space and shall be no less than 15 feet in height, as measured from the top surface of the roadway to the lowest protrusion of the overhang.
9. Residential rear service alleys that function as fire department emergency vehicle access shall meet

the access criteria as described in Item 2 of this section and Figure A106.2.

10. Design live load for emergency vehicle on parking structure, deck shall conform at a minimum to A.A.H.S.T.O. Loading Standard HS-20.

11. Alternatives to Emergency Vehicle Access will be considered on a case-by-case basis and examined and approved through the Code Modification process in accordance with Section 106.3 of the *Virginia Uniform Statewide Building Code*, 2003 edition. Features that will be considered include, but are not limited to occupancy, combustibility, construction enhancements and passive and active fire protection enhancements over the base-line requirements for the structure. Refer to Alexandria Fire and EMS Department document *Exterior Fire Department Operations and Supplemental Fire Protection and Rescue Features in Mid-Rise and High-Rise Structures* for alternative design approaches.

SECTION A107 - EMERGENCY VEHICLE EASEMENTS

A107.1 Emergency Vehicle Easements. Emergency vehicle easements shall be a minimum of 22 feet across the travel lane. The emergency vehicle easement shall provide access to strategic areas of the building and fire protection systems as designed by the Director of Code Enforcement. Curbing and street components shall conform to the standards established by Transportation and Environmental Services for emergency vehicle easements.

A107.2 Sign Specifications. Emergency vehicle easement signs shall be metal construction, 12-inches wide and 18 inches in height. Provide red letters on reflective white background with a 3/8-inch red trim strip around the entire outer edge of the sign. The lettering shall say "NO PARKING", "EMERGENCY VEHICLE EASEMENT", "EM. VEH. EAS"., and "City of Alex." and be placed as shown in Figure A107.1, A107.2 and A107.3. Lettering size shall be as follows: "NO PARKING" - 2 inches, "EMERGENCY VEHICLE EASEMENT" - 2 ½ inches. EM. VEH. EAS. - 1 inch, CITY OF ALEX. - ½ inch. Directional Arrows - 1 inch by 6 inches solid shaft with solid head - 1 ½ inches wide and 2 inches deep (See Figures A107.1, A107.2, A107.3 for examples). Signs shall be mounted with the bottom of the sign 7 feet above the roadway, and shall be properly attached to a signpost or other approved structure such as designated by the Director of Code Enforcement. Posts for signs, when required, shall be metal and securely mounted. Signs shall be parallel to ~~face~~ the direction of vehicle travel and posted so the directional arrows clearly show the boundaries and limits of the Emergency Vehicle Easement. In areas where emergency vehicle easements involve two-way traffic, double mounted signs shall be provided. The maximum distance between signs shall be 100 feet. Other special signs or modifications to emergency vehicle easement signs shall be approved by the Director of Code Enforcement.

A107.3 Fire Dept. Access Lanes/Mountable Curbs. Where curbing is a component of the emergency vehicle easement, the curbing construction shall conform to weight and grade requirements for vehicular traffic. In no circumstances shall a raised curb be located in the path of travel in a emergency vehicle easement. Where a mountable curb is provided as part of an emergency vehicle easement, emergency vehicle easement signs shall be posted at the point nearest the edge of the emergency vehicle easement, but in no case within the clear width of the emergency vehicle easement.

SECTION A108 - CONVEYANCE OF EMERGENCY VEHICLE EASEMENT TO CITY OF ALEXANDRIA

A108.1 General. The property owner shall have an Engineer or Surveyor submit to the Transportation & Environmental Services Department a preliminary plat indicating location, width, boundary and a description of the composition of easement for the Emergency Vehicle Easement.

A108.2 Agency Review. The Transportation & Environmental Services Department and the director of Code

Enforcement shall review the plat to determine whether the Emergency Vehicle Easement is necessary or desirable and has adequate access, width, and turning radius. Transportation & Environmental Services Department will determine if the existing paved surface meets city standard (CSAP-1A). All elevated surfaces shall meet H-20 specifications. If the Emergency Vehicle Easement is attached to the terms and conditions of a Special Use Permit, then the applicant must also file with the City's Planning & Zoning Office for review. All appropriate agencies will comment on the content of the plat.

A108.3 Approval. If approved, the applicant will submit a final plat and descriptive deed. The City of Alexandria will sign and return to applicant for recordation.

A108.4. Recordation. Upon recordation, the applicant will report deed book and page number (instrument number) to Transportation & Environmental Services Dept. to be kept on file. The final plat and bond will not be released until the deed has been recorded.

FIGURE A106.1 MINIMUM STANDARDS FOR EMERGENCY VEHICLE ACCESS TO PRIVATE STREETS AND ALLEYS

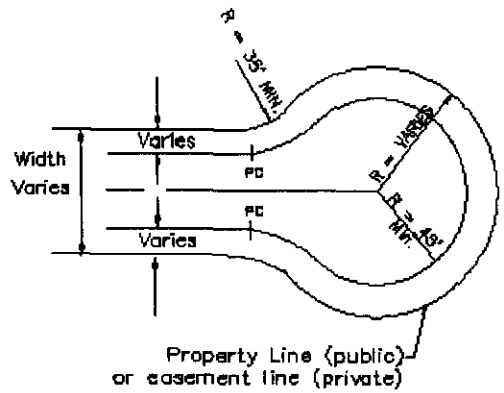

CUL-DE-SAC
PRIVATE STREET TURNAROUND

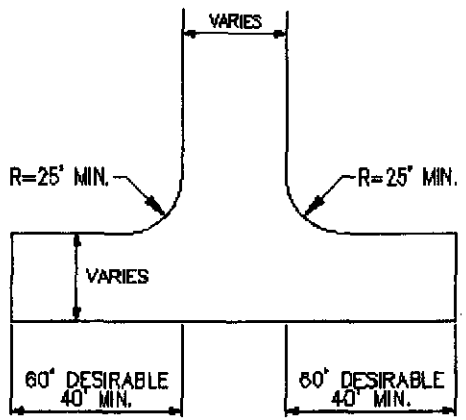

HAMMERHEAD
PRIVATE STREET TURNAROUND

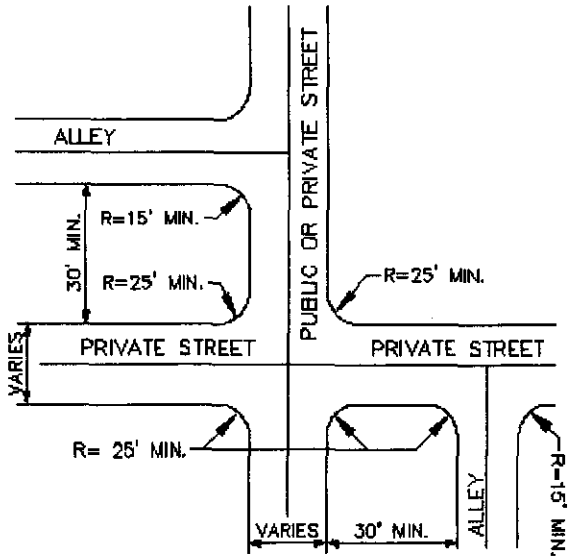

INTERSECTION LAYOUT

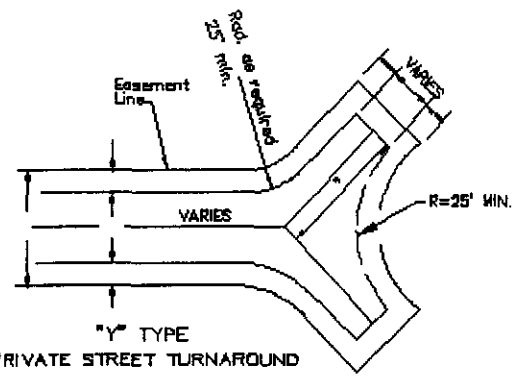

"Y" TYPE
PRIVATE STREET TURNAROUND
* DIMENSION VARIES TO FIT
INDIVIDUAL PLAN – 60 FOOT MINIMUM

GENERAL NOTES:

1. ALL TRAVEL WAYS TO CARRY EMERGENCY VEHICLES OR PUBLIC TRASH SERVICE MUST BE BUILT TO MINIMUM STREET STANDARDS CSPRS-1 THROUGH CSPRS-6 AND HAVE TURN -A- ROUNDS
2. ALL EMERGENCY VEHICLE EASEMENTS MUST CONFORM TO CSAP-1A OR BETTER.

FIGURE A106.2
RESIDENTIAL REAR SERVICE ALLEY STANDARDS

(MUST BE USED ON ALL NEW RESIDENTIAL DEVELOPMENT PROJECTS WHERE VEHICULAR ACCESS IS FROM THE REAR)

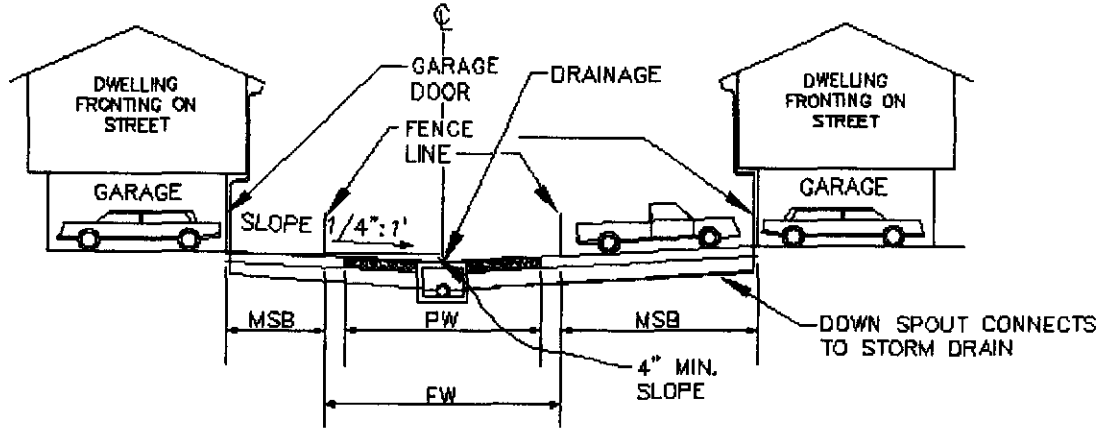

CSRR SA–2
ALL REQUIRED PARKING IN GARAGE (NO PARKING IN ALLEY)

CSRR SA–1
REQUIRED PARKING IN DRIVEWAY AND GARAGE (NO PARKING IN ALLEY)

RESIDENTIAL REAR SERVICE ALLEY STANDARD	MINIMUM WIDTHS					
	TWO – WAY TRAFFIC FLOW			ONE – WAY TRAFFIC FLOW		
	PW	EW	MSB	PW	EW	MSB
CSRR SA–1	22'	24'	20'	18'	20'	20'
CSRR SA–2	22'	24'	10'	18'	20'	10'

NOTES:
1. MINIMUM RADII WHERE ALLEYS MEET STREETS OR OTHER ALLEYS = 15'.
2. ALLEY GUTTER MAY BE ADJUSTED OFF CENTER TO MATCH TERRAIN.
3. (MSB) = MINIMUM SET BACK.
4. (EW) = EASEMENT WIDTH.
5. (PW) = PAVEMENT WIDTH.

FIGURE A107.1 FIRE LANE SIGN

FIGURE A107.2 FIRE LANE SIGN

FIGURE A107.3 FIRE LANE SIGN

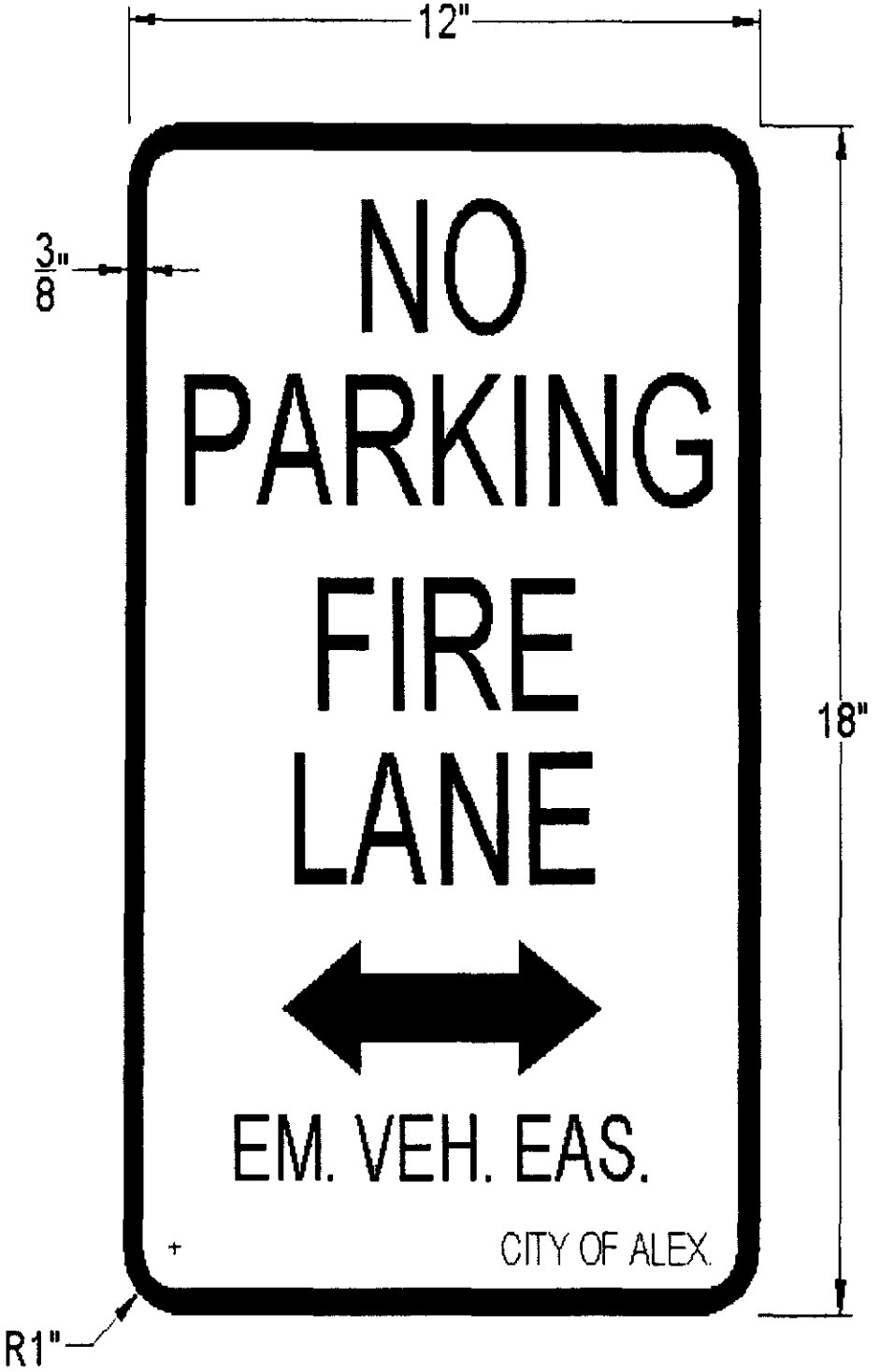

APPENDIX B - REQUIREMENTS FOR A FIRE WATCH

SECTION B101 GENERAL

B101.1 Scope. When a fire sprinkler, alarm, detection or suppression system becomes impaired or is unable to provide the proper protection for which it was designed, it becomes necessary to find an alternate means to monitor the conditions in buildings relative to life safety and property protection. For short term and on a temporary basis, a fire watch is a system of activities designed to provide onsite observation, documentation and notification in the event of a fire emergency.

SECTION B102 REQUIREMENTS

B102.1 Procedures. When the establishment of a fire watch is ordered by the Fire Department or Code Enforcement Bureau, the owner or the owner's representative shall implement the following procedures and requirements for the duration of the fire watch. The fire watch shall be maintained until such time the noted system(s) is returned to normal ready service and approved for use by the Code Enforcement Bureau.

B102.2 Requirements. A fire watch shall consist of the following:

Designated number of staff (minimum of two personnel) at all times and until the compromised system has been repaired, inspected, tested and certified to be placed back in service by the Code Enforcement Bureau. Each participating staff member shall be equipped with reliable two-way communications. One staff member shall always be stationed in an area or room equipped with a working telephone or cellular phone to report an alarm by dialing 9-1-1.

NOTE: When dialing 911 from a cellular phone, some cellular phone systems may connect user with another jurisdiction's emergency communications center, therefore the caller should confirm they are speaking with the "Alexandria Fire and EMS Dept. Emergency Communications Center".

Walking tour of all areas of the building no less than every 15 minutes to observe for conditions where fire, smoke or hazardous situations require fire department response,
- or-
A complete tour of the facility within a time frame prescribed by a representative of the Code Enforcement Bureau of Fire Department and with the staffing level contingent upon the size of the facility and the type of occupancy.

NOTE: If the building or property is of such size that two individuals cannot adequately perform the required fire watch, the Fire Department representative may require additional on site personnel. The Fire Department representative may require additional on site personnel. The Fire Department representative may permit one person to perform the fire watch if the building or property is size that one person can adequately perform the fire watch.

A legibly written log shall be kept on site at all times for review by any Fire Department employee documenting:

(a) Reason the fire watch was implemented
(b) Date and time the Fire Department was notified the fire watch was initiated and concluded.
(c) Start and stop time of each building or property tour.
(d) Key locations visited in the building(s) requiring the fire watch.
(e) Name(s) of personnel conducting the fire watch.
(f) Name(s) of personnel recording the information.

Personnel conducting the fire watch shall be:

(a) Capable of performing patrol duties
(b) Reliable
(c) Not addicted to the use of or under the influence of intoxicants, narcotics, illegal drugs, and/or physically or mentally impaired by prescription drugs.
(d) Able to clearly and accurately converse with Fire Department personnel in English, in the event of any emergency.
(e) Able to remain awake and alert at all times.

NOTE: In all cases, the sole duty of personnel assigned to the fire watch shall be to perform constant patrols of the protected premises, to keep watch for fires, and if necessary to summon the fire department.

If a fire is located:

(a) The fire watch staff shall immediately call 9-1-1 and report the location of the fire within the building.
(b) Begin the evacuation of the building starting on the fire floor, then above the fire floor, then below the fire floor.
(c) Do not attempt to extinguish the fire.

(4) Appendix C, Requirements for Fireworks Displays is amended by adding the following:

APPENDIX C - REQUIREMENTS FOR FIREWORKS DISPLAYS

SECTION C101 GENERAL

C101.1 Scope. This appendix provides the permit and display requirements for the use of fireworks within the City of Alexandria. The City of Alexandria shall issue permits, upon application in writing, for the display of aerial fireworks, commonly known as pyrotechnic displays, for fair associations, amusement parks, or by any organization or group of individuals; provided such display is in general accord with the applicable sections of National Fire Protection Association (NFPA) 1123, *Fireworks Displays,* a referenced standard, listed in Chapter 45, of the Virginia Statewide Fire Prevention Code.

SECTION C102 REQUIREMENTS

C102.1 Insurance Requirements. The Code Enforcement Bureau shall issue no permit until all requirements of this appendix are submitted for review, approved, and the applicant files a certificate of insurance with the City of Alexandria named as a co-insured on all policies in the amount of two million ($2,000,000) dollars for each bodily injury and property damage. The insurance policy shall become available for the payment of any damage arising from acts or omissions of the applicant, his agents or his employees in connection with the display of aerial fireworks. The applicant shall ensure the insurance policy is in effect at the time of the commencement of activities authorized by the permit and remains continuously in effect until such are completed.

C102.2 Requirements for Permit Application. An application for the display of aerial fireworks shall be completed and submitted to the Code Enforcement Bureau 45 days before the scheduled event. The application for aerial fireworks display shall include the following:

(a) A copy of insurance policy with the City of Alexandria named as a co-insured.
(b) A site plan with the layout of the discharge site, spectator site, viewing area, parking area, fallout area and distances for each; distances to all tents, buildings and structures.
(c) Provide a complete list of aerial fireworks to be displayed.
(d) Provide type and amount of fire protection.
(e) The type of physical barrier that will be installed around display site and number of monitors that will be used during performance.

(f) Identify the type of security and number of monitors that will be onsite during the display.
(g) Provide the shooter / operator's name, address, social security number, and date of birth.
(h) Provide fireworks display company address and emergency contact numbers.
(i) Provide emergency contact information including the owner of the property name and number, third shooter / operator (within one hour of travel), and hazardous material transport company responsible for transportation and security.
(j) Method of storage and location that display fireworks are to be stored.

C102.3 Firework Display Requirements. The following requirements of the Virginia Statewide Fire Prevention Code and National Fire Protection Association (NFPA) 1123, *Fireworks Displays*, briefly stated, are applicable to all fireworks displays, which require a permit from the local authority having jurisdiction.

The area selected for the discharge of aerial shells shall be located so that the trajectory of the shells will not come within 25 feet of any overhead object.

Display area shall incorporate a 70 feet diameter radius, per inch of largest fireworks display shell.

Ground Displays shall be located a minimum distance of 75 feet from spectator viewing areas and parking areas. Spinning Wheels, Roman Candles, and Large Salutes shall be located 125 feet form viewing areas.

Fire works shall not be discharged within 100 feet of any tent or canvas shelter.

The point of firing of aerial fireworks is to be at least 200 feet from the nearest permanent building, public highway, or railroad, and be at least 50 feet from the nearest aboveground telephone or telegraph line or other overhead obstruction. In no case shall a display be fired within 500 feet of a school, theater, church, hospital or similar institution.

The potential landing area shall be a large, clear, open area acceptable to the authority having jurisdiction.

Spectators, vehicles, or any readily combustible materials shall not be located within the potential landing area during the display.

Spectators shall be restrained behind lines at least 200 feet from the firing point by physical barriers and monitors. Only persons in active charge of the display shall be allowed inside these lines.

Projectile type fireworks shall fire into the air as nearly as possible in a vertical direction except fireworks fired beside a lake or other large body of water, the fireworks may be directed in such a manner that the firing residue of deflagrations will fall into the said body of water.

Unfired fireworks shall be covered or protected during firing and those remaining after display shall be immediately disposed of in a way safe for the particular type of firework.

If at any time, high winds in excess of 15 miles per hour, unusually wet weather prevails, or any other condition that represents an unsafe condition in the opinion of the authority having jurisdiction or the display operator, the public display shall be postponed until weather or other unsafe conditions improve to an acceptable level.

Extremely dry conditions shall require the display and fallout areas to be soaked with water before event commencing. If the outdoor burning restrictions are in place, outdoor firework displays shall not occur.

Portable water fire extinguishers or other adequate fire protection will be required at discharge site.

Display operators and assistants shall use only flashlights or electric lighting for artificial illumination.

Neither smoking nor open flames shall be allowed in the display or shell storage area as long as shells are present. Signs to this effect shall be conspicuously posted.

In the event of a shell failing to ignite in the mortar, the mortar shall be left alone for a minimum of 15 minutes then, carefully flood with water. Immediately following the display, the mortar shall be emptied into a bucket of water. The supplier shall be contacted as soon as possible for disposal instructions.

The entire firing range shall be inspected immediately following the display to locate any defective shells. The inspection shall be completed before the public having access. Any shells found shall be immediately doused with water before handling. The shells shall then be placed in a bucket of water. The supplier shall then be contacted as soon as possible for proper disposal instructions.

All operators shall be at least 21 years of age. Assistants shall be 18 years of age. An adequate number operators, assistants, and monitors shall be on hand to conduct the display. At no time shall there be less than two operators on duty.

No person shall handle or be involved in the firing of fireworks while under the influence of alcohol, narcotics, or drugs, which could adversely affect judgment, movement, or stability.

A method of communication (preferably a cellular phone) shall be on or near the display site in the event of an emergency. The Alexandria Fire and EMS Communication Center (phone number 911) shall be immediately notified in the event of fire and/or injury.

Fireworks Displays shall be completely set-up and ready for inspection at least 2 hours before event.

Personnel from the Code Enforcement Bureau Fire Marshals Office are required to inspect the display area before the event commencing, monitor the event and conduct a post event inspection.

Obtain and maintain original Fire Prevention Code Permit for Aerial Fireworks Display on the event site.

If the storage of fireworks is approved in the City of Alexandria, the operator shall maintain the original Fire Prevention Code Permit for aerial fireworks on the event site and comply with all Bureau of Alcohol, Tobacco, and Firearms storage requirements.

APPENDIX D - REQUIREMENTS FOR STAIRWAY IDENTIFICATION

SECTION D101 GENERAL

D101.1 Scope. Stairway identification prevents firefighters and citizens from becoming disoriented during a fire when smoke obscures vision. The requirement shall apply to all buildings above three stories in height.

D101.2 Purpose. Stairway identification ensures all stairwell landings are marked in a prescribed manner to help determine the location of the person within the building.

D102 REQUIREMENTS

D102.1 Requirements. The requirements outlined shall be followed to identify and properly mark each stairwell located within your building greater than three stories

Building Stairwell Identification Program shall be submitted to the Code Enforcement Bureau for approval within 90 days of receipt of notification.

All buildings greater than three stories must display in the lobby and fire control room a simplified schematic with the building footprint.

The footprint shall be an overhead view of the buildings exterior and the general layout of the lobby of the first floor. Stairwells shall be denoted by letter, starting next to the main entrance with "A" and continuing in a clockwise or left to right pattern. **(See Figure D102.1)**

Additionally, a sign approved by the Code Enforcement Bureau shall be provided at each landing in all interior stairwells, identifying the stairwells' letter, designating the floor level and the level of exit discharge. It should also state if there is no access tot he roof. (roof access means to the roof regardless whether they are locked).

The sign shall be located five (5) feet above the floor landing in a position that is readily visible when the stairwell door is opened or closed. This information may be stenciled directly onto the wall. **(See Figure D102.2).**

The signs must have lettering that is a minimum of 4 inches in height, and the lettering must be of a color contrasting with the background stairwell wall color.

Two copies of the footprint and the stairwell sign shall be submitted to the Code Enforcement Bureau for approval prior to installation.

FIGURE D102.1

EXAMPLE BUILDING FOOTPRINT AND STAIRWELL IDENTIFICATION LAYOUT

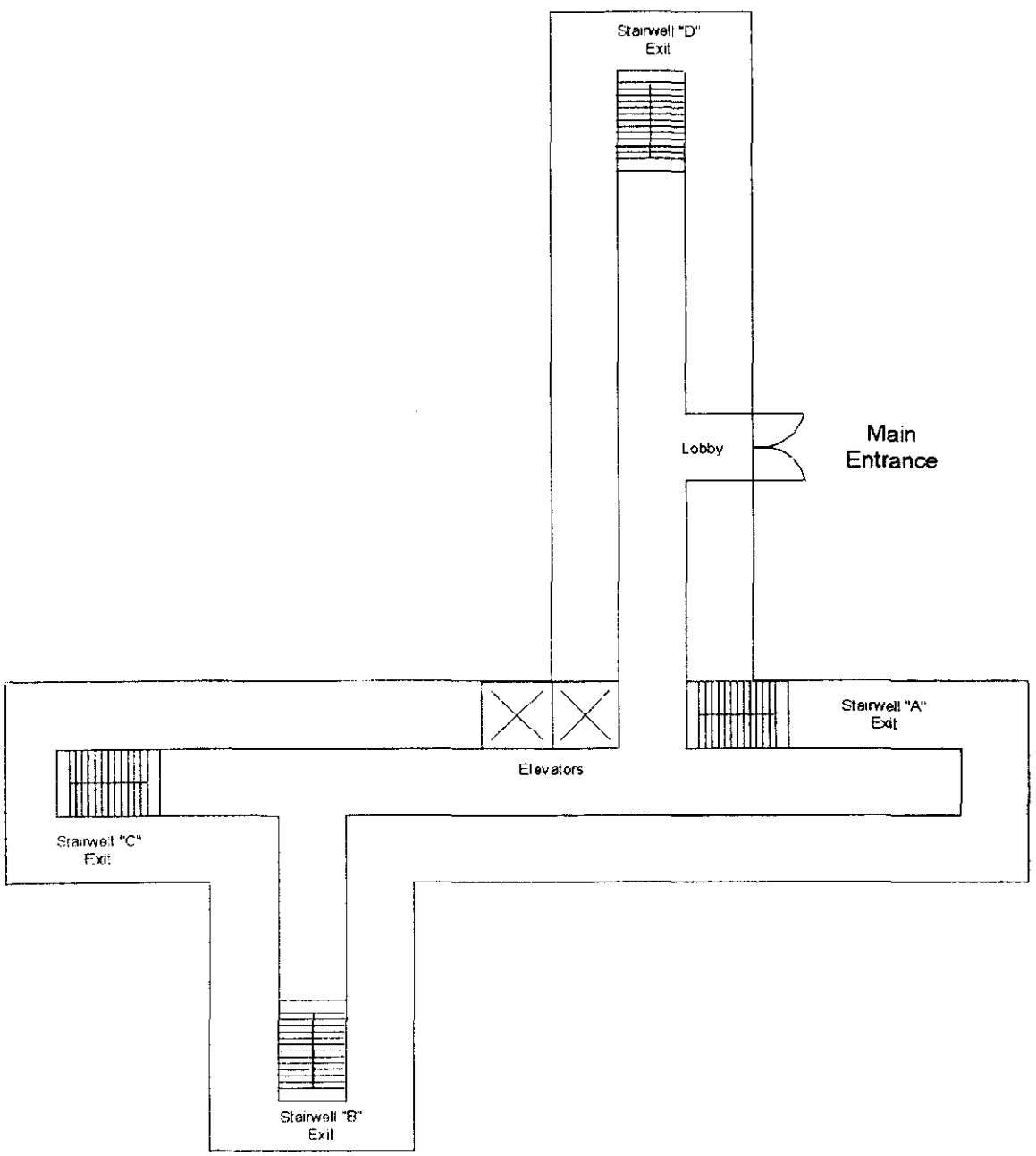

FIGURE D102.2

EXAMPLE STAIRWELL IDENTIFICATION SIGN

STAIRWELL - A

-

FLOOR - 12

-

EXIT DISCHARGE
FLOOR - 1

NO ROOF ACCESS

(5) Appendix F, Requirements For Exterior Spray Painting Operations is amended by adding the following:

APPENDIX F - REQUIREMENTS FOR EXTERIOR SPRAY PAINTING OPERATIONS

SECTION F101 - GENERAL

F101.1 Scope. This appendix provides permit and other requirements for exterior spray painting operations that do not exceed an accumulative area of 9 (nine) square feet per day.

SECTION F102 - REQUIREMENTS

F102.1 Permit Requirements. A permit shall be applied for with all required supporting documentation and upon approval, issued to perform limited exterior spray-painting. The applicant shall submit two copies of the proposed procedure outlining process to include the following: a complete list of Material Safety Data Sheets for materials to be utilized, a chemical/paint inventory, the method of on site storage, the method of transportation between sites, the method of paint application, the method of waste/spray paint recovery, site plans, list of all application areas in which spraying will occur, the type of on site fire protection, 24 hour emergency contact information and the site contact.

F102.2 General Requirements. The following general requirements shall apply to all exterior spray painting operations and are subject to review and approval by Code Enforcement Bureau personnel prior to commencing exterior spray painting operations.

The Hazardous Use Permit shall be kept in the on site contractors vehicle at all times. Absence of the on site permit will void permitted process and the area will be deemed non-compliant. If this occurs, all equipment and paint shall be removed from the City of Alexandria limits.

The applicant shall locate spray-painting operations a minimum of 50 feet from a building structure or a property line.

The applicant shall ensure the spray painting operation is not continuous in nature.

The applicant shall ensure that no exterior electrical equipment is within 20 feet unless it meets the requirement of NEC Class I, Division II, including flexible electrical extension cords, and approved by the Code Enforcement Bureau. Permit holder shall submit a site plan for approval for each site. Permit holder shall not implement spraying process until site plans are approved.

The applicant shall not use portable electrical lamps inside the spray-painting area.

The applicant shall provide a minimum of one (40-BC) dry chemical fire extinguisher outside the application area and within 30 feet of travel.

The applicant shall remove all possible ignition sources This shall include securing and stopping all motors on vehicles.

The applicant shall not permit open flames within 20 feet of the designated spray area.

The applicant shall not permit hot or heated surfaces within the designated spray area.

The applicant shall not permit smoking within the spray area. Signage shall be posted and visible from the exterior of the designated spray areas.

The applicant shall clean spray-painting equipment in a manner approved by the Fire Official.

Only class II or III solvents shall be utilized on the exterior.

The applicant shall provide a smooth surface for the limited area spray operation. Porous surfaces such as asphalt is not permitted.

If an interior limited area spray operation is approved and utilized, the applicant shall provide the area with approved fire protection and positive ventilation approved for flammable liquids.

The applicant shall ensure that all equipment and containers are listed for the flammable or combustible liquid use. If flammable liquids will be transferred from one container to another, the applicant shall ensure that at least one container is bonded and/or grounded.

The applicant shall ensure that Class I flammable liquids and/or solvents are not utilized for cleaning of equipment. Only Class II and III combustible liquids may be utilized for cleaning of equipment.

The applicant shall keep the limited spray-painting area clean of over spray and residue.

The applicant shall control odors, smoke and any other air pollution from operations at the site and prevent them from leaving the property or becoming a nuisance to neighboring properties, as determined by the Department of Transportation and Environmental Services.

The applicant shall not dispose of material by venting material into the atmosphere.

(6) Appendix H, Carnivals And Fairs is added:

APPENDIX H - CARNIVAL S AND FAIRS

H101.1. Scope. This appendix provides permit and other requirements for outdoor assemblies and events.

H102 General Requirements.

(a) Public Safety plan. A plan shall be submitted to the Director of Code Enforcement for all carnivals and fairs. The public safety plan shall include procedures for reporting emergencies, relocating and evacuating occupants, primary and secondary evacuation routes, occupant assembly points, employee responsibility and assignments, 24-hour emergency contact numbers and methods and types of security.

(b) Site Plan. A site plan shall be submitted to the Director of Code Enforcement for review and approval 45 days prior to the event. The site plan shall identify the positioning of amusement rides, fire department access points, fire lanes, fire hydrants, fire extinguishers, exit points, emergency evacuation routes and emergency shelters.

(c) Fire Prevention Code Permits. Operational permit requirements are outlines in Table 107.2. Permits will be required for tents and canopies exceeding 900 square feet, open flames, assembly of 50 persons or more and for the carnival or fair event itself.

(d) Inspections. Inspection requests for building, electrical, mechanical, plumbing and fire safety shall be made 24 business hours prior to the event.

(7) Chapter 1, section 105.1 is deleted and substitute the following:

105.1 Fire Official. The provisions of the Virginia Statewide Fire Prevention Code and this article shall be enforced by the Director of Code Enforcement as the Fire Official, and any other person authorized by the Fire Official or Fire Chief to conduct inspections under the Virginia Statewide Fire Prevention Code or this article.

(8) Chapter 1, section 107.1 is deleted and substitute the following:

107.1 Notice. It shall be unlawful to engage in any business activity involving the handling, storage or use of hazardous materials, substances or devices, or to maintain, store or handle materials, or to conduct processes producing conditions hazardous to life or property, or to install equipment utilized in connection with such activities, or to establish an assembly occupancy without first notifying the Director of Code Enforcement.

(9) Chapter 1, Table 107.2 is deleted and replaced with the following Table 107.2:

Table 107.2 Operational Permit Requirements and Exempt Quantities.

Description	Code Section	Permit Fee
Aerosol products. Aggregate quantity of Level 2 or Level 3 aerosol products in excess of 500 pounds (227 kg) net weight when manufacturing, storing or handling.	2801.2	$100.00
Amusement buildings.	403.3	$100.00
Asphalt Kettles.	303.10	$100.00
Aviation facilities.	1101.3	$100.00
Carnivals and fairs.	403.2	$250.00
Battery systems. Stationary lead-acid battery systems having a liquid capacity of more than 50 gallons (189L).	608.1.1	$100.00
Cellulose nitrate film. Storage, handling or use in any assembly or educational occupancy (Group A and E)	306.3	$100.00
Combustible dust-producing operations.	1301.2	$100.00
Combustible fibers. Storage and handling of combustible fibers in quantities greater than 100 cubic feet (2.8 m²) Exception: Not required for agricultural storage.	2901.3	$100.00

Compressed gas. Storage, use or handling at normal temperature and pressure (NTP) of compressed gases in excess of the amounts listed below. Exception: Vehicles equipped for and using compressed gas as a fuel for propelling the vehicle. PERMITS AMOUNTS FOR COMPRESSED GASES TYPE OF GAS — AMOUNT (CUBIC FEET AT NTP) Corrosive — 200 Flammable (except cryogenic fluids and liquified petroleum gases). — 200 Highly toxic — Any Amount Inert, simple asphyxiant and non-flammable gases — 6000 Oxidizing (including oxygen) — 504 Toxic — Any Amount For SI: 1 cubic foot = 0.02832 m^3	3001.2	$100.00
Covered mall buildings.	408.11 .4	$500.00
Corrosives. Storage, use, handling: Gases — 200 cubic feet at (NTP) Liquids — 55 gallons Solids — 1000 pounds	3101.2	$100.00

Cryogenic fluids. Produce, store, transport on site, use, handle or dispense. Type — Inside Building (gal) — Outside Building (gal) Flammable — more than 1 — 60 Inert — 60 — 500 Oxidizing (includes oxygen) — 10 — 50 Physical or health hazard not indicated above — Any amount — Any amount Exception: Vehicles equipped for and using cryogenic fluids as a fuel for propelling the vehicle or for refrigerating the lading.	3201.2	$100.00
Cutting and Welding. sweating pipes and hot works	2601.2	$100.00
Dry cleaning plants.	1201.2	$100.00
Exhibits and trade shows.	403.3	$100.00
Explosives and fireworks. An operational permit is required for the manufacture, possession, storage, handling. sale or other disposition, transportation or use of any quantity of explosive, explosive material, fireworks, or pyrotechnic special effects within the scope of Chapter 33, or to operate a terminal for handling explosive materials, or to deliver or receive delivery of explosives or explosive materials from a carrier between sunset and sunrise. **Explosive Vehicle Inspection.** (Valid for 6 months only)	3301.2	$100.00 $100.00
Emergency Vehicle Access Roadway.	503.1.1	$100.00
Fire hydrants and valves. Operate or use any fire hydrants or valves used for fire suppression service.	508.5.1.1	$100.00

Flammable and combustible liquids. 1. To use or operate a pipeline for the transportation with facilities or flammable or combustible liquids. This requirement shall not apply to the offsite transportation (DOTn) (see Section 3501.1.2) nor does it apply to piping systems (see Section 3503.6). 2. To store, handle or use of Class I liquids in excess of 5 gallons (19L) in a building or in excess or 10 gallons (37.9L) outside of a building, except that a permit is not required for the following: 2.1 The storage or use of Class I liquids in the fuel tanks of a motor vehicle, aircraft, motorboat, mobile power plant or mobile heating plant unless such storage, in the opinion of the Fire Official would cause an unsafe condition. 2.2 The storage or use of paints, oils, varnishes or similar flammable mixtures when such liquids are stored for maintenance, painting or similar purposes for a period of not more than 30 days. 3. To store, handle or use Class II or Class IIIA liquids in excess of 25 gallons (95L) in a building or in excess of 60 gallons (227L) outside a building, except for fuel oil used in connection with oil-burning equipment. 4. To remove Class I or Class II liquids from an underground storage tank used for fueling motor vehicles by means other than the approved, stationary on-site pumps normally used for dispensing purposes. 5. To operate tank vehicles, equipment, tanks, plants, terminals, wells, fuel-dispensing stations, refineries, distilleries and similar facilities where flammable and combustible liquids are produced, processed, transported, stored, dispensed or used. 6. To install, alter, remove, abandon, place temporarily out of service (for more than 90 days) or otherwise dispose of an underground, protected above-ground or above-ground flammable or combustible liquid tank. 7. To change the type of contents stored in a flammable or combustible liquid tank to a material which poses a greater hazard that for which the tank was designed and constructed. 8. To manufacture, process, blend, or refine flammable or combustible liquids.	3401.4	$100.00

Flammable Gases.	3501.2	$100.00
Flammable Solids.	3601.2	$100.00
Floor Finishing. Using Class I or Class II liquids exceeding 350 square feet (33 m²).	1510.1.2	$100.00
Fruit and crop ripening.	1601.2	$100.00
Fumigation and thermal insecticidal fogging.	1701.2	$100.00
Hazardous materials.	2701.5	$100.00

PERMIT AMOUNTS FOR HAZARDOUS MATERIALS

TYPE OF MATERIAL	**AMOUNT**
Combustible liquids	See flammable and combustible liquids
Corrosive material	See compressed gases
Gases	55 gallons
Liquids	1000 pounds
Solids	See Explosives
Explosive materials	See explosives
Flammable materials	
Gases	See compressed gases
Liquids	See flammable and combustible liquids
Solids	100 pounds
Highly Toxic materials	
Gases	See compressed gases
Liquids	See flammable and combustible liquids
Solids	100 pounds
Oxidizing materials	
Gases	See compressed gases
Liquids	
Class 4	Any amount
Class 3	1 gallon
Class 2	10 gallons
Class 1	55 gallons
Solids	
Class 4	Any amount
Class 3	10 gallons
Class 2	100 gallons
Class 1	500 gallons

PERMIT AMOUNTS FOR HAZARDOUS MATERIALS (CONTINUED) **TYPE OF MATERIAL — AMOUNT** Organic peroxides Liquids Class I — Any amount Class II — Any amount Class III — 1 gallon Class IV — 2 gallons Class V — No permit required Solids Class I — Any amount Class II — Any amount Class III — 10 pounds Class IV — 20 pounds Class V — No permit required Pyrophoric materials Gases — See compressed gases Liquids — Any amount Solids — Any amount Toxic materials Gases — See compressed gases Liquids — 10 gallons Solids — 100 pounds Unstable (reactive) materials Liquids Class 4 — Any amount Class 3 — Any amount Class 2 — 50 pounds Class 1 — 100 pounds Water-reactive materials Liquids Class 3 — Any amount Class 2 — 5 gallons Class 1 — 55 gallons Solids Class 3 — Any amount Class 2 — 50 pounds Class 1 — 500 pounds For SI: 1 gallon = 3.785 L, 1 pound = 0.454 kg.	2701.5	$100.00
Heliports and Helistops.	1107.1.1	$100.00

Highly Toxic Materials.	3701.2	$100.00
High-piled storage. Use a building or portion exceeding 500 square feet (46 m²).	2301.2	$100.00
Indoor display of vehicles or equipment.	314.4.1	$100.00
Indoor Pyrotechnics.	3308.2	$250.00
Industrial ovens.	2101.2	$100.00
Lumber yards and woodworking plants. Storage or processing exceeding 100,000 board feet (8,333 ft³) (236m³)	1901.2	$100.00
Liquid or gas fueled vehicles in assembly buildings.	3803.2.2.1	$100.00
LP Gas. Storage and use inside or outside of any building. Exception: 1. Individual containers with 500 gallons (1893L)water capacity or less serving occupancies in Use Group R-3. 2. Operation of cargo tankers that transport LP gas.	3801.2	$100.00
Magnesium. Melt, cast, heat treat or grind more than 10 pounds (4.54 kg).	3606.1.2	$100.00
Miscellaneous combustible storage. Store in any building or upon any premises in excess of 2,500 cubic feet (71m³) gross volume of combustible empty packing cases, boxes, barrels or similar containers, rubber tires, rubber cork or similar combustible material.	315.1.2	$100.00
Open burning. **Open burning -Charitable organizations.**	307.2	$100.00 $10.00
Open flames, heat producing appliances, or torches for removing paint.	308.4.1	$100.00
Organic coatings. Manufacturing operation producing more than 1 gallon (4L) of an organic coating in one day.	2001.2	$100.00
Organic peroxides.	3901.2	$100.00
Places of Assembly/educational. occupancy less than 50 persons occupancy 50 to 100 persons occupancy over 100 persons	408.1.1	 $50.00 $100.00 $250.00
Private fire hydrants.	508.5.1.1	$100.00
Pyrophoric materials.	4101.2	$100.00

Pyroxylin plastics. Storage and handling of more that 25 pounds (11kg) or cellulose nitrate (pyroxylin) plastic and for the assembly or manufacture of articles involving pyroxylin plastics.	4201.2	$100.00
Refrigeration equipment.	606.1.2	$100.00
Repair Garages, Service Stations and Motor Fuel Dispensing Facilities	2201.2	$100.00
Semiconductor Fabrication Facilities -HPM Facilities	1801.5	$250.00
Special Outdoor Assembly and Events.	403.1.2	$250.00
Application of Flammable Finishes, Spraying and Dipping.	1501.2	$100.00
Storage of scrap tires and tire byproducts. Establish, conduct or maintain storage of scrap tires and tire byproducts exceeding 2,500 cubic feet (71m^3) of total volume of scrap tires and for indoor storage of tires and tire byproducts.	2509.3	$100.00
Temporary membrane structures, tents and canopies.	2403.2	$100.00
Tire rebuilding plants.	2501.2	$250.00
Torches for removing paint and sweating pipe.	308.4.1	$100.00
Unstable (reactive) materials.	4301.2	$100.00
Waste material and junk yards	316.2	$100.00
Water reactive materials.	4401.2	$100.00
Wood products. Store chips, hogged material, lumber or plywood in excess of 200 cubic feet (6 m^3)	1907.1.1	$100.00

~~Table 107.2 Operational Permit Requirements.~~

~~Description (Permit thresholds stated in SFPC Table 107.2)~~	~~Permit Required~~	~~Code Section~~	~~Permit Fee~~
~~Aerosol products. Aggregate quantity of Level 2 or Level 3 aerosol products in excess of 500 pounds (227 kg) net weight when manufacturing, storing or handling.~~	~~Yes~~	~~2801.2~~	~~$88.50~~
~~Amusement buildings.~~	~~Yes~~	~~403.1.3~~	~~$88.50~~
~~Aviation facilities.~~	~~Yes~~	~~1101.3~~	~~$88.50~~
~~Carnivals and fairs.~~	~~Yes~~	~~403.1.2~~	~~$88.50~~
~~Battery systems. Stationary lead-acid battery systems having a liquid capacity of more than 50 gallons (189L)~~	~~Yes~~	~~608.1.2~~	~~$88.50~~
~~Cellulose nitrate film. Storage, handling or use in any assembly or educational occupancy (Group A and E)~~	~~Yes~~	~~306.3~~	~~$88.50~~
~~Combustible dust-producing operations.~~	~~Yes~~	~~1301.2~~	~~$88.50~~
~~Combustible fibers. Storage and handling of combustible fibers in quantities greater than 100 cubic feet (2.8 m³) Exception: Not required for agricultural storage.~~	~~Yes~~	~~2901.3~~	~~$88.50~~
~~Compressed gas. Storage, use or handling at normal temperature and pressure (NTP) of compressed gases in excess of the amounts listed below. Exception: Vehicles equipped for and using compressed gas as a fuel for propelling the vehicle.~~	~~Yes~~	~~3001.2~~	~~$88.50~~

~~PERMITS AMOUNTS FOR COMPRESSED GASES~~

~~TYPE OF GAS~~	~~AMOUNT (CUBIC FEET AT NTP)~~
~~Corrosive~~	~~200~~
~~Flammable (except cryogenic fluids and liquified petroleum gases.~~	~~200~~
~~Highly toxic~~	~~Any amount~~
~~Inert, simple asphyxiant and non-flammable gases~~	~~6000~~
~~Oxidizing (including oxygen)~~	~~504~~
~~Toxic~~	~~Any amount~~

~~For SI: 1 cubic foot = 0.02832 m³~~

~~Covered mall buildings.~~	~~Yes~~	~~408.11.4~~	~~$500.00~~

~~Corrosives. Storage, use, handling~~ ~~Yes~~ ~~3101.2~~ ~~$88.50~~

~~Gases~~ ~~200 cubic feet at (NTP)~~

~~Liquids~~ ~~55 gallons~~

~~Solids~~ ~~1000 pounds~~

~~Cryogenic fluids. Produce, store, transport on site, use, handle or dispense.~~ ~~Yes~~ ~~3201.2~~ ~~$88.50~~

~~Type~~	~~Inside Building (gal)~~	~~Outside Building (gal)~~
~~Flammable~~	~~more than 1~~	~~60~~
~~Inert~~	~~60~~	~~500~~
~~Oxidizing (includes oxygen)~~	~~10~~	~~50~~
~~Physical or health hazard not indicated above~~	~~Any amount~~	~~Any amount~~

~~Exception: Vehicles equipped for and using cryogenic fluids as a fuel for propelling the vehicle or for refrigerating the lading.~~

~~Cutting and Welding.~~ ~~Yes~~ ~~2601.2~~ ~~$88.50~~

~~Dry cleaning plants.~~ ~~Yes~~ ~~1201.2~~ ~~$88.50~~

~~Exhibits and trade shows~~ ~~Yes~~ ~~403.1.3~~ ~~$88.50~~

~~Explosives. An operational permit is required for the manufacture, possession, storage, handling, sale or other disposition, transportation or use of any quantity of explosive, explosive material, fireworks, or pyrotechnic special effects within the scope of Chapter 33, or to operate a terminal for handling explosive materials, or to deliver or receive delivery of explosives or explosive materials from a carrier between sunset and sunrise. Explosive Vehicle Inspection - (Valid for 6 months only)~~ ~~Yes~~ ~~3301.2~~ ~~$100.00~~

~~Emergency Vehicle Access Roadway.~~ ~~Yes~~ ~~503.1.1~~ ~~$88.50~~

~~Fire hydrants and valves. Operate or use any fire hydrants or valves used for fire suppression service.~~ ~~Yes~~ ~~508.4~~ ~~$88.50~~

~~Flammable and combustible liquids.~~ ~~Yes~~ ~~3401.4~~ ~~$88.50~~

~~1. To use or operate a pipeline for the transportation with facilities or flammable or combustible liquids. This requirement shall not apply to the offsite transportation (DOTn) (see Section 3503.60).~~

~~2. To store, handle or use of Class I liquids in excess of 5 gallons (19L) in a building or in excess or 10 gallons (37.9L) outside of a building, except that a permit is not required for the following:~~

~~a. The storage or use of Class I liquids in the fuel tanks of a motor vehicle, aircraft, motorboat, mobile power plant or mobile heating plant unless such storage, in the opinion of the Fire Official would cause an unsafe condition.~~

~~b. The storage or use of paints, oils, varnishes or similar flammable mixtures when such liquids are stored for maintenance, painting or similar purposes for a period of not more than 90 days.~~

~~3. To store, handle or use Class II or Class IIIA liquids in excess of 25 gallons (95L) in a building or in excess of 60 gallons (227L) outside a building, except for fuel oil used in connection with oil-burning equipment.~~

~~4. To remove Class I or Class II liquids from an underground storage tank used for fueling motor vehicles by means other than the approved, stationary on-site pumps normally used for dispensing purposes.~~

~~5. To operate tank vehicles, equipment, tanks, plants, terminals, wells, fuel-dispensing stations, refineries, distilleries and similar facilities where flammable and combustible liquids are produced, processed, transported, stored, dispensed or used.~~

~~6. To install, alter, remove, abandon, place temporarily out of service (for more than 90 days) or otherwise dispose of an underground, protected above-ground or above-ground flammable or combustible liquid tank.~~

~~7. To change the type of contents stored in a flammable or combustible liquid tank to a material which poses a greater hazard that for which the tank was designed and constructed.~~

~~Flammable Gases.~~	~~Yes~~	~~3501.2~~	~~$88.50~~
~~Flammable Solids.~~	~~Yes~~	~~3601.2~~	~~$88.50~~
~~Floor Finishing. Using Class I or Class II liquids exceeding 350 square feet (33 m²).~~	~~Yes~~	~~1510.1.2~~	~~$88.50~~
~~Fruit and crop ripening.~~	~~Yes~~	~~1601.2~~	~~$88.50~~
~~Fumigation and thermal insecticidal fogging.~~	~~Yes~~	~~1701.2~~	~~$100.00~~
~~FOR HAZARDOUS MATERIALS~~	~~Yes~~	~~2701.5~~	~~$88.50~~

~~TYPE OF MATERIAL~~	~~AMOUNT~~
~~Combustible liquids~~	~~See flammable and combustible liquids~~
~~Corrosive material~~	
~~Gases~~	~~See compressed gases~~
~~Liquids~~	~~55 gallons~~
~~Solids~~	~~1000 pounds~~
~~Explosive materials~~	~~See explosives~~
~~Flammable materials~~	
~~Gases~~	~~See compressed gases~~
~~Liquids~~	~~See flammable and combustible liquids~~
~~Solids~~	~~100 pounds~~
~~Highly Toxic materials~~	
~~Gases~~	~~See compressed gases~~
~~Liquids~~	~~See flammable and combustible liquids~~
~~Solids~~	~~100 pounds~~
~~Oxidizing materials~~	
~~Gases~~	~~See compressed gases~~
~~Liquids~~	
~~Class 4~~	~~Any amount~~
~~Class 3~~	~~1 gallon~~
~~Class 2~~	~~10 gallons~~
~~Class 1~~	~~55 gallons~~
~~Solids~~	
~~Class 4~~	~~Any amount~~
~~Class 3~~	~~10 gallons~~
~~Class 2~~	~~100 gallons~~
~~Class 1~~	~~500 gallons~~
~~Organic peroxides~~	
~~Liquids~~	
~~Class I~~	~~Any amount~~
~~Class II~~	~~Any amount~~
~~Class III~~	~~1 gallon~~
~~Class IV~~	~~2 gallons~~
~~Class V~~	~~No permit required~~
~~Solids~~	
~~Class I~~	~~Any amount~~
~~Class II~~	~~Any amount~~
~~Class III~~	~~10 pounds~~
~~Class IV~~	~~20 pounds~~
~~Class V~~	~~No permit required~~

~~PERMIT AMOUNTS FOR HAZARDOUS MATERIALS~~

~~TYPE OF MATERIAL~~	~~AMOUNT~~

~~Pyrophoric materials~~

~~Gases~~	~~See compressed gases~~
~~Liquids~~	~~Any amount~~
~~Solids~~	~~Any amount~~

~~Toxic materials~~

~~Gases~~	~~See compressed gases~~
~~Liquids~~	~~10 gallons~~
~~Solids~~	~~100 pounds~~

~~Unstable (reactive) materials~~

~~Liquids~~

~~Class 4~~	~~Any amount~~
~~Class 3~~	~~Any amount~~
~~Class 2~~	~~50 pounds~~
~~Class 1~~	~~100 pounds~~

~~Water-reactive materials~~

~~Liquids~~

~~Class 3~~	~~Any amount~~
~~Class 2~~	~~5 gallons~~
~~Class 1~~	~~55 gallons~~

~~Solids~~

~~Class 3~~	~~Any amount~~
~~Class 2~~	~~50 pounds~~
~~Class 1~~	~~500 pounds~~

~~For SI: 1 gallon = 3.785 L, 1 pound = 0.454 kg.~~

~~Highly Toxic Materials.~~	~~Yes~~	~~3701.2~~	~~$88.50~~
~~High-piled storage. Use a building or portion exceeding 500 square feet (46 m²).~~	~~Yes~~	~~2301.2~~	~~$100.00~~
~~Hot works operations.~~	~~Yes~~	~~303.9~~	~~$88.50~~
~~Indoor display of vehicles or equipment.~~	~~Yes~~	~~314.4.1~~	~~$88.50~~
~~Industrial ovens.~~	~~Yes~~	~~2101.2~~	~~$88.50~~
~~Lumber yards and woodworking plants. Storage or processing exceeding 100,000 board feet (8,333 ft³) (236m³)~~	~~Yes~~	~~1901.2~~	~~$88.50~~
~~Liquid or gas fueled vehicles in assembly buildings.~~	~~Yes~~	~~3803.2.2.1~~	~~$88.50~~
~~LP Gas. Storage and use inside or outside of any building. Exception: 1. Individual containers with 500 gallons (1893L) water capacity or less serving occupancies in Use Group R-3. 2. Operation of cargo tankers that transport LP gas.~~	~~Yes~~	~~3801.2~~	~~$88.50~~
~~Magnesium. Melt, cast, heat treat or grind more than 10 pounds (4.54 kg).~~	~~Yes~~	~~3606.1.2~~	~~$88.50~~
~~Miscellaneous combustible storage. Store in any building~~	~~Yes~~	~~315.1.2~~	~~$88.50~~

~~or upon any premises in excess of 2,500 cubic feet (71m³) gross volume of combustible empty packing cases, boxes, barrels or similar containers, rubber tires, rubber cork or similar combustible material.~~			
~~Open burning.~~	~~Yes~~	~~307.2~~	~~$88.50~~
~~Open burning charitable organizations.~~	~~Yes~~	~~307.2~~	~~$10.00~~
~~Open flames, candles and heat producing appliances or torches for removing paint.~~	~~Yes~~	~~308.4.1~~	~~$88.50~~
~~Organic coatings. Manufacturing operation producing more than 1 gallon (4L) of an organic coating in one day.~~	~~Yes~~	~~2001.2~~	~~$88.50~~
~~Organic peroxides.~~	~~Yes~~	~~3901.2~~	~~$88.50~~
~~Oxidizers~~	~~Yes~~	~~4001.2~~	~~$88.50~~
~~Places of Assembly/educational~~	~~Yes~~	~~403.1.4~~	
~~- occupancy less than 50 persons~~	~~Yes~~	~~403.1.4a~~	~~$50.00~~
~~- occupancy 50 to 100 persons~~	~~Yes~~	~~403.1.4b~~	~~$100.00~~
~~- occupancy over 100 persons~~	~~Yes~~	~~403.1.4c~~	~~$250.00~~
~~Private fire hydrants.~~	~~Yes~~	~~508.5.2.1~~	~~$88.50~~
~~Pyrophoric materials.~~	~~Yes~~	~~4101.2~~	~~$88.50~~
~~Pyrotechnic special effects material.~~	~~Yes~~	~~3301.2~~	~~$100.00~~
~~Pyroxylin plastics. Storage and handling of more that 25 pounds (11kg) or cellulose nitrate (pyroxylin) plastic and for the assembly or manufacture of articles involving pyroxylin plastics.~~	~~Yes~~	~~4201.2~~	~~$88.50~~
~~Refrigeration equipment.~~	~~Yes~~	~~606.1.2~~	~~$88.50~~
~~Repair Garages and service stations.~~	~~Yes~~	~~2201.2~~	~~$88.50~~
~~Rooftop heliport.~~	~~Yes~~	~~1107.1~~	~~$88.50~~
~~Semiconductor Fabrication Facilities -HPM Facilities~~	~~Yes~~	~~1801.5~~	~~$250.00~~
~~Special Outdoor Assembly and Events.~~	~~Yes~~	~~403.1.2~~	~~$250.00~~
~~Spraying and dipping~~	~~Yes~~	~~1501.2~~	~~$100.00~~
~~Storage of scrap tires and tire byproducts. Establish, conduct or maintain storage of scrap tires and tire byproducts exceeding 2,500 cubic feet (71m³) of total volume of scrap tires and for indoor storage of tires and tire byproducts.~~	~~Yes~~	~~2501.2~~	~~$100.00~~

~~Temporary membrane structures, tents and canopies.~~	~~Yes~~	~~2401.2~~	~~$88.50~~
~~Tire rebuilding plants.~~	~~Yes~~	~~2503.1.2~~	~~$250.00~~
~~Unstable (reactive) materials.~~	~~Yes~~	~~4301.2~~	~~$88.50~~
~~Waste material and junk yards.~~	~~Yes~~	~~316.2~~	~~$88.50~~
~~Water reactive materials. Store chips, hogged material, lumber or plywood in excess of 200 cubic feet (6 m³)~~	~~Yes~~	~~4401.2~~	~~$88.50~~
~~Wood products. Store chips, hogged material, lumber or plywood in excess of 200 cubic feet (6 m³)~~	~~Yes~~	~~1907.1.1~~	~~$88.50~~

(10) Chapter 1, Section 107.12 is amended by adding the following after the last sentence of the paragraph to read:

The permit fee schedule is shown in Table 107.2 Operational Permit Requirements.

(11) Chapter 1, Section 108.3.1 is deleted and substitute the following:

108.3.1 Period of validity. Permits are valid for a period of 12 months from issuance, unless a different period is stated on the permit or the permit is revoked. Notwithstanding the foregoing, multiple permits issued at different times for the same location shall all expire at the same time as the first permit issued for the location.

(12) Chapter 1, Section 108.3.5 is amended by adding the following subsections:

108.3.5.1 Access to permit premises. Any person or business required by section 107.2 to have a permit(s) on premises shall make the necessary keys, any manufacturers material safety data sheets related to products regulated by the permit(s), location of the operation subject to permit(s) within the premises, emergency personnel information and other pertinent information relating to the permitted activity available to fire department personnel by use of an approved locking box on the exterior of the building.

108.3.5.2 Permit location. Permits are valid only at the location stated in the permit and cannot be transferred to a different location or address.

108.3.5.3. Permit location - exception. Permits issued under sections 308.1.1 for the use of a heat producing appliance or torch to remove paint of 2601.2 for cutting and welding operations may be used on a citywide basis during the period of validity of the permit. All necessary fire protection equipment required by section 308.4 and Chapter 26 of the Virginia Statewide Fire Prevention Code, or other referenced codes or standards, must be in place and ready for use at each location prior to beginning operations covered under these types of permit(s).

(13) Chapter 1, Section 110 is amended by adding subsection 110.7:

110.7 Imminent danger or threat to human health or safety or to property. If the Fire Official determines that any violation creates an imminent danger or threat to human health or safety or to property, the Fire Official may forthwith correct or abate such violation, and request that the City Attorney institute appropriate legal proceedings to recover the full cost of such response from the property owner, tenant or other responsible party.

(14) Chapter 2. Section 202 is amended by adding the following definition:

~~Overcrowding: See section 1002.1~~

Person: Includes a corporation, firm partnership association, organization or any other group acting as a unit, as well as individuals. It shall also include an executor, administrator, trustee, receiver or other representative appointed according to law. Whenever the term "person" appears in any section of this code prescribing a penalty or fine, as to partnerships and associations, the word shall include the partners or members thereof, and as to corporations, shall include the officer, agents or members thereof, who are responsible for any violation of such section.

(15) Chapter 3. Section 301.2 Permits is deleted.

(16) Chapter 3. Section 303 is amended by changing the code subsections:

303.10 ~~**303.9**~~ **Permits.** Permits shall be obtained from the Director of Code Enforcement in accordance with Table 107.2.

303.10.1 ~~**303.9.1**~~ **Safety Plan.** Where required by the Director of Code Enforcement, a fire safety plan, emergency procedures, and employee training programs for roof installation, repair, and other related operations shall be approved by the Director of Code Enforcement or designee prior to operations.

(17) Chapter 3. Subsection 304.1.1 is amended by adding the following:

304.1.1 Waste materials. Accumulations of wastepaper, wood, hay, straw, weeds, litter or combustible or flammable wastes, cooking oils, or rubbish of any type shall not be permitted to remain on a roof or in any court, yard, vacant lot, alley, parking lot, open space, or beneath a grandstand, bleacher, pier, wharf, manufactured home, recreational vehicle or other similar structure.

(18) Chapter 3, Subsection 304.3 is deleted and substitute the following:

304.3 Containers. Combustible rubbish and waste material shall be stored in accordance with Section 304.3.1 through 304.3.3.

(19) Chapter 3. Subsection 304.3 is amended by adding the following subsections:

304.3.1.1 Container lids. All containers shall be equipped with a self-closing lid unless approved by the Director of Code Enforcement.

304.3.2.1 Secondary containment. All cooking oil containers exceeding 5.33 cubic feet (40 gallons) shall be provided with approved secondary containment.

(20) Chapter 3. Subsection 306 is amended by adding the following subsections:

306.3 Permits. Permits shall be obtained from the Director of Code Enforcement in accordance with Table 107.2.

(21) Chapter 3. Section 307 is amended by deleting and substituting the following:

307.1 General. A person shall not cause or allow open burning unless approved in accordance with this code and the air pollution control code (chapter 1 of title 11 of the City Code) of the city. No person shall kindle, or authorize to be kindled or maintain any fire in such a manner that it constitutes a danger to public health and safety as determined by the Director of Code Enforcement.

307.2 Permit Required. A permit shall be obtained from the Director of Code Enforcement in accordance with Table 107.2 prior to kindling a fire for recognized silvicultural or range or wildlife management practices, prevention or control of disease of pests, or a bonfire. Application for such approval shall only be presented by and permits issued to the owner of the land upon which the fire is to be kindled.

307.2.1 - Allowable burning: Open burning shall be allowed without prior notification to the Code Official for recreational fires, highway safety flares, fires for the training of fire fighters under the direction of the Fire Department, smudge pots.

307.2.2 Prohibited Open Burning. Open burning that will be offensive or objectionable because of smoke or odor emissions when atmospheric conditions or local circumstances make such fires hazardous shall be prohibited. The Fire Code Official is authorized to order the extinguishment by the permit holder of the Fire Department of open burning.

(22) Chapter 3, Section 308.1.1 is deleted:

~~**308.1.1 Permit Required.** A permit shall be obtained from the Director of Code Enforcement in accordance with Table 107.2~~

(23) Chapter 3, Section 308.4 is amended by deleting and substituting the following text and subsections:

308.4 Torches for removing paint and sweating pipe. Persons utilizing a torch or other flame-producing device for removing paint from a structure shall provide a minimum of one portable fire extinguisher complying with Section 906 and with a minimum 4-A rating, two portable fire extinguishers, each with a minimum 2-A rating, or a water hose connected to the water supply on the premises where such burning is done. The person doing the burning shall remain on the premises 1 hour after the torch or flame-producing device is utilized. This person shall ~~be at least 21 years of age~~ and shall have access to a means of contacting the Fire Department in an emergency.

308.4.1 Permit required. A permit shall be obtained from the Director of Code Enforcement in accordance with Table 107.2 prior to the utilization of a torch of other flame-producing device for removing paint. See 2601.2

(24) Chapter 3, Section 314.4. is amended by deleting and substituting the following:

314.4 Vehicles and equipment. It shall be unlawful to store, display or repair in or on a building or structure, or any part thereof, any vehicle, tool or equipment that has a fuel tank containing a flammable or combustible liquid or liquified petroleum gas as a source of fuel, unless the building or structure is built and maintained in accordance with the requirements of the Uniform Statewide Building Code, and this code, for such storage, display or repair; provided that this section shall not apply to single-family dwellings where the storage, display or repair is not conducted as a business. Where indoor display of vehicles is permitted by the Fire Official, the following safeguards shall be employed:

1) Batteries are disconnected
2) Fuel in tank does not exceed one-quart tank or 5 gallons (19L), whichever is least.
3) Fuel tanks and fill openings are closed and sealed to prevent tampering.
4) Vehicles, boats or other motorcraft equipment are not fueled or defueled within the building.

(25) Chapter 3, Section 314 is amended by adding the following subsection:

314.4.1 Permit Required. A permit shall be obtained from the Director of Code Enforcement in accordance with Table 107.2.

(26) Chapter 3. Section 314.0 is amended as adding subsection 314.5

314.5 Storage or display in roofed-over malls. No combustible goods, merchandise or decorations shall be displayed or stored in a roofed-over mall unless approved by the Fire Official.

(27) Chapter 3, Subsection 315.1 is amended by deleting the second sentence:

315.1 General. Storage, use, and handling of miscellaneous combustible materials shall be in accordance with this section.

(28) Chapter 3, Subsection 315.1 is amended by adding the following subsection:

315.1.2 Permit Required. A permit shall be obtained from the Director of Code Enforcement in accordance with Table 107.2.

(29) Chapter 3 Subsection 315.2.1 Ceiling clearance is amended by deleting and substituting the following:

315.2.1 Ceiling clearance. Storage inside any structure shall be maintained in a neat, orderly and safe manner. No storage shall be permitted within 24 inches of the lowest portion of a ceiling, or the supporting structure thereof, or within 18 inches of the deflector plate of a sprinkler head, is so equipped, in any building. In buildings where sprinkler heads are mounted above the supporting structure of the roof, no storage shall be permitted within 18 inches of the supporting structure.

(30) Chapter 3 is amended by adding a new section 316.0:

316.0 Waste Materials and Junk Yards.

316.1 General. No person making, using, storing, having charge of or having under his control in a building or on any vacant lot, alley, parking lot, open space or property any combustible excelsior, rubbish, sacks, bags, litter, hay, straw or other combustible waste material shall fail at the close of each day to remove all such material which is not compactly baled and/or stacked in an orderly manner, from the building or on any vacant lot, alley, parking lot, open space or property or store it in suitable vaults or in metal-lined and covered receptacles or bins. The Director of Code Enforcement shall require suitable baling equipment to be installed in stores, apartment buildings, factories and other buildings where accumulations of paper and waste material are not removed at least every second day.

316.2 Permits. Permits shall be obtained from the Director of Code Enforcement in accordance with Table 107.2 for the operation of waste material facilities, junkyards or any facility where 2500 cubic feet or material is stored.

(31) Chapter 3 is amended by adding a new section - 317.0

317.0 Noxious, Flammable or combustible vapors.

317.1 General. This section shall apply to any process or operation which produces flammable, combustible or noxious fumes or vapors, other than during the regular course of processed or operations normally conducted at the premises.

317.2 Ventilation. All such processes or operations shall have sufficient natural or supplies ventilation to prevent the migration of such fumes or vapors within the structure. Such processes or operations shall be conducted at times when the building has the fewest number of occupants.

317.3 Ignition sources. No such process or operation shall be conducted prior to assuring that all potential ignition sources have been identified and extinguished.

317.4 Alarm and sprinkler systems. If the potential exists to activate an alarm system by conducting such a process or operation, the alarm system shall be disabled and a fire watch in accordance with Appendix B, "Requirements for a Fire Watch" shall be maintained by a person other than the person conducting the process or operation. The person maintaining the fire watch shall have the capability of contacting the Fire Department without having to reactivate the alarm system. No disabling of the alarm system shall be permitted, without prior notification to Fire Department Communications Division. Any protective measures taken to protect either the fire alarm or sprinkler systems at the premises, such as covering detectors or taping sprinkler head, shall be reported to the communication section of the fire department, prior to such measures being taken. At the completion of the process or operation, all such systems shall be fully restored to function and the fire department shall be so notified.

317.5 Fire Department notification. Any person conducting such process or operation shall notify the Fire Department Communications Division of the time, date and place at which such process or operation will be conducted at least 24 hours prior to commencement. Such notice is required even is a permit has previously been obtained for the process or operation.

317.6 Occupant notification. The owner, tenant, property manager or other person responsible for causing such process or operation to be conducted shall give reasonable notice to occupants of the premises of the type of process, date and time of occurrence and of the potential for the production of flammable, combustible or noxious fumes or vapors.

(32) Chapter 4, Section 403 is amended by changing the code subsections:

<u>403.2</u> ~~403.1.2~~ **Permits.** A permit shall be obtained from the Director of Code Enforcement for special outdoor assembly events, carnivals and fairs in accordance with Table 107.2

<u>403.2.1</u> ~~403.1.2.1~~ **Safety plan.** A safety plan outlining the event shall be submitted to the Director of Code Enforcement 30 days prior to the event start date. The safety plan shall include a site map identifying locations of fire lanes, apparatus access points, food vendors, amusement rides, tents, hazardous materials, hydrants, citizens assembly points and emergency evacuation shelters.

<u>403.2.2</u> ~~403.1.2.2~~ **Emergency coordinators.** The event coordinator shall provide the Director of Code Enforcement with on-site and emergency contact telephone numbers for at least five event coordinators.

<u>403.2.3</u> ~~403.1.2.3~~ **Outdoor food handling.** All deep fat fryers, woks utilized for deep fat frying or similar cooking devices using hot oil or grease shall be in a mobile unit or trailer with a vented hood and an approved fire suppression system.

<u>403.3</u> ~~403.1.3~~ **Permits.** A permit shall be obtained from the Director of Code Enforcement for all indoor exhibits, trade shows, and special amusement events in accordance with Table 107.2.

<u>403.3.1</u> ~~403.1.4~~ **Permits.** A permit shall be obtained from the Director of Code Enforcement for the utilization of a space or structure for the purposed of assembly in accordance with Table 107.2

(33) Chapter 4, Section 404 is amended by adding and editing the following subsection:

404.2.1 Fire evacuation plans. Fire evacuation plans for all educational occupancies shall be submitted to the fire official for review and approval at least 30 days prior to the start of each school session, unless otherwise approved by the Fire Official.

(34) Table 405.2 is amended and a new footnote is added as follows:

Table 405.2
FIRE AND EVACUATION DRILL

FREQUENCY AND PARTICIPATION

GROUP OR OCCUPANCY	FREQUENCY	PARTICIPATION
Group A	Quarterly	Employees
Group E	Monthly [a]	All occupants [c]
Group I	Quarterly on each shift	Employees [b]
Group R-1	Quarterly on each shift	Employees
Group R-4	Quarterly on each shift	Employees

[a] The frequency shall be permitted to be modified in accordance with Section 408.3.2.
[b] Fire and evacuation drills in residential care assisted living facilities shall include complete evacuation of the premises in accordance with Section 408.10.5. Where occupants receive habilitation or rehabilitation training, fire prevention and fire safety practices shall be included as part of the training program.
[c] In those buildings equipped with "areas of rescue assistance" evacuation to such areas by persons designated to use such areas, shall be deemed to comply with the requirements of this section.

(35) Chapter 4, section 408.1 is amended by adding the following:

408.1.1 Permits. Permits shall be obtained from the Director of Code Enforcement for all places of assembly and education in accordance with Table 107.2.

(36) Chapter 4, Section 408.11 is amended as follows:

408.11 Covered mall buildings. Covered mall buildings shall comply with the provisions of Sections 408.11.1 through 408.11.4.

(37) Chapter 4, Section 408.11 is amended by adding the following subsection:

408.11.4 Permit required. A permit shall be obtained from the Director of Code Enforcement in accordance with Table 107.2.

(38) Chapter 5, Section 501.2 Permits is deleted.

(39) Chapter 5, Section 501.4 is reinstated and amended as follows:

501.4 Timing of installation: Fire apparatus access roads and water supply for fire protection shall be installed and maintained in accordance with Appendix A "Water and Fire Requirements for New Construction," prior to, and during construction, except when alternative methods of protection are approved by the Director of Code Enforcement. Temporary street signs shall be installed at each intersection when construction of new roadways allows passage of vehicles in accordance with Section 505.2.

(40) Chapter 5, Section 503.1 is amended by deleting and substituting the following:

503.1 Emergency access roadways. Emergency vehicle access shall be installed and maintained in accordance with this section and Appendix A "Water and Fire Requirements for New Construction."

(41) Chapter 5, Sections 503.1.1 and 503.1.2 are deleted and the following subsections substituted.

503.1.1 Permit Required. A permit shall be obtained from the Director of Code Enforcement in accordance with Table 107.2 for all emergency vehicle access roadways.

503.1.2 Temporary fire lanes. The Fire Official is authorized to designate and identify temporary fire lanes during emergency conditions to ensure access of fire department equipment and personnel.

(42) Chapter 5, Section 503.2 through 503.2.7 are deleted and the following subsection substituted:

503.2 Signs and markings. The property owner or designee shall supply, install and maintain signs and other markings to designate and identify fire lanes (emergency vehicle easements) as directed by the Director of Code Enforcement. The signs shall identify the starting point, continuation and end point for all fire lanes.

(43) Chapter 5, Section 503.3 is deleted and the following subsection substituted:

503.3 Sign Specifications. Fire lane signs shall conform to the following standards, and shall be installed in accordance with the requirements of Appendix A "Water and Fire Requirements for Site Plans and New Construction" as follows:

Metal construction, dimensions 12 inches by 18 inches.

Red letters on a reflective white background, with a three-eights inch red border around the entire outer edge of the sign.

Red directional arrows on the sign shall be used to indicate the direction and continuation of the fire lanes.

Lettering size and layout with uniform spacing between words and centered inside the red border as follows:

NO (2 inches)
PARKING (2 inches)

FIRE (2 ½ inches)
LANE (2 ½ inches)

(directional arrow) (1 inch x 6 inch solid shaft with solid head 1½ inches wide and 2 inches deep)

EM. VEH. EAS. (1 inch)

City of Alex. (½ inch) or approved City Seal

(44) Chapter 5, Section 503.4 is amended by adding the following text:

503.4 Obstruction of fire apparatus access roads. Fire apparatus access roads and fire lanes shall not be obstructed in any manner, including the parking vehicles. The minimum widths and clearances established in Section 503.2.1 shall be maintained at all times.

(45) Chapter 5, Section 506 is deleted and substitute the following:

506.1 Key repository: Owners of building in which fire alarm or fire suppression systems are installed after June 14, 1997, shall provide a key repository to the satisfaction of the Director of Code Enforcement. This key repository shall be of a type approved by the Director of Code Enforcement and shall be located on the exterior of the building, near the main entrance. Keys shall be placed in the repository to allow the Fire Department access to investigate alarms of fire reported from the building.

(46) Chapter 5, section 508 is deleted and substitute the following:

508.3 Fire flow. Fire flow requirements for buildings or portions of buildings and facilities shall be

determined in accordance with Appendix A "Water and Fire Requirements for Site Plans and New Construction".

(47) Chapter 5. Section 508.5.1 is deleted and substitute the following:

508.5.1 Where required. Fire hydrants shall be installed as required by Appendix A "Water and Fire Requirements for Site Plans and New Construction".

(48) Chapter 5. Section 508.5.1 is amended by adding the following subsection:

508.5.1.1 Permits. Permits shall be obtained from the Director of Code Enforcement in accordance with Table 107.2 for all private fire hydrants to operate or use fire hydrants or valves used for fire suppression service.

Exception: A permit is not required for authorized employees of the City of Alexandria, the Virginia American Water Company or their designees that manage the water system or the Fire Department to use or operate fire hydrants or valves.

(49) Chapter 5. Section 509, is amended by add a section title.

509.1.1 Operations Manual. All buildings that have a fire control room shall equip that room with an operations manual. The fire official shall review and approve the contents of the manual.

(50) Chapter 6. Subsection 601.2 is deleted.

(51) Chapter 6. Subsection 606 is amended by adding the following subsection: 606.1.2

606.1.2 Permit required. A permit shall be obtained from the Director of Code Enforcement in accordance with Table 107.2.

(52) Chapter 6. Subsection 608 is amended by adding the following subsection: 608.1.1

608.1.1 Permit required. A permit shall be obtained from the Director of Code Enforcement in accordance with Table 107.2.

(53) Chapter 6, Subsection 610 is amended by adding the following:

610.3 Service. All commercial kitchen hoods and ductwork shall be cleaned, serviced and maintained at a minimum of 6-month intervals. A cleaning schedule shall be submitted for review and approval to the Director of Code Enforcement.

(54) Chapter 9. Subsection 901.3 is deleted.

(55) Chapter 9, Section 901.6.2 is deleted and substitute the following:

901.6.2 Test records. A completed written record of all tests and inspections required under this chapter shall be maintained on the premises by the owner or occupant responsible for said premises and a copy of any such record shall be provided to the Code Official after the completion of any test or inspection. Accurate logs shall be maintained, indicating the number, location and type of device tested. Any defect, modification or repair shall be logged, and the log shall be made available to the Code Official. All records of system inspections, tests and maintenance required by the referenced standards shall be maintained on the premises for a minimum of 5 years and made available to the Code Official upon request.

901.6.3 Test responsibility and notification: The Code Official shall not be responsible for any damages incurred during any test required under the provisions of this chapter. Any test required under the provisions of this chapter shall be performed in the presence of the Code Official, unless such requirement is waived by the Code Official. Any such test shall be scheduled at the convenience of the owner or occupant responsible for said premises and the Code Official.

901.6.4 Periodic testing, inspection and maintenance: All water-based extinguishing systems including fire sprinkler, water mist, water-spray, and standpipe systems shall be periodically inspected, tested and maintained in accordance with the requirements of NFPA 25 listed in Chapter 45. Any required inspections and tests shall be performed in the presence of the Code Official, unless such requirement is waived by the Code Official. Fees for the attendance of the Code Official shall be charged in accordance with the fee schedule of the Code Enforcement Bureau.

901.6.5 Periodic testing, inspection and maintenance. All foam-extinguishing systems shall be maintained, periodically inspected and tested in accordance with NFPA 11, 11A and 16 listed in Chapter 45. Any required inspections and tests shall be performed in the presence of the Code Official unless such requirement is waived by the Code Official. Fees for the attendance of the Code Official shall be charged in accordance with the fee schedule of the Code Enforcement Bureau.

901.6.6 Periodic testing, inspection and maintenance. All fire suppression systems including those listed in Sections 901.7 through 901.11 shall be periodically inspected, tested, and maintained in accordance with the requirements and standards listed in Chapter 45. Any required inspections and tests shall be performed in the presence of the Code Official unless such requirement is waived by the Code Official. Fees for the attendance of the Code Official shall be charged in accordance with the fee schedule of the Code Enforcement Bureau.

901.6.7 ~~6~~ Periodic testing, inspection and maintenance. All carbon dioxide extinguishing systems shall be maintained, periodically inspected and tested in accordance with NFPA 12 listed in Chapter 45 and Sections 904.8.1 through 904.8.5. Any required inspections and tests shall be performed in the presence of the Code Official unless such requirement is waived by the Code Official. Fees for the attendance of the Code Official shall be charged in accordance with the fee schedule of the Code Enforcement Bureau.

901.6.8 ~~7~~ Periodic testing, inspection and maintenance. All halogenated extinguishing systems shall be maintained, periodically inspected and tested in accordance with NFPA 12 A listed in Chapter 45 and Sections 904.9.1 through 904.9.3. Any required inspections and tests shall be performed in the presence of the Code Official, unless such requirement is waived by the Code Official. Fees for the attendance of the Code Official shall be charged in accordance with the fee schedule of the Code Enforcement Bureau.

901.6.9 ~~8~~ Periodic testing, inspection and maintenance. All clean agent fire extinguishing systems shall be maintained, periodically inspected and tested in accordance with NFPA 2001 listed in Chapter 45, the system manufacturer's instructions and Sections 904.10.1 through 904.10.3. Aby required inspections and tests shall be performed in the presence of the Code Official, unless such requirement is waived by the Code Official. Fees for the attendance of the Code Official shall be charged in accordance with the fee schedule of the Code Enforcement Bureau.

901.6.10 ~~9~~ Periodic testing, inspection and maintenance. All dry-chemical extinguishing systems shall be maintained, periodically inspected and tested in accordance with NFPA 17 listed in Chapter 45, the system manufacturer's instructions and Sections 904.11.1 through 904.11.4. Any required inspections and tests shall be performed in the presence of the Code Official. Fees for the attendance of the Code Official shall be charged in accordance with the fee schedule of the Code Enforcement Bureau.

901.6.11 ~~10~~ Periodic testing, inspection and maintenance. All wet-chemical extinguishing systems shall be maintained, periodically inspected and tested in accordance with NFPA 17A listed in Chapter 45 and Sections 904.5.1 and 904.5.2. Any required inspections and tests shall be performed in the presence of the Code Official, unless such requirement is waived by the Code Official. Fees for the attendance of the Code Official shall be charged in accordance with the fee schedule of the Code Enforcement Bureau.

901.6.12 ~~11~~ Periodic testing, inspection and maintenance. All fire detection and alarm systems shall be maintained, periodically inspected and tested in accordance with NFPA 72 listed in Chapter 45 and section 907.20.1 and 907.20.5. Any required inspections and tests shall be performed in the presence of the Code Official, unless such requirement is waived by the Code Official. Fees for the attendance of the Code Official shall be charged in accordance with the fee schedule of the Code Enforcement Bureau.

901.6.13 ~~12~~ Periodic testing, inspection and maintenance. Emergency alarms in building, rooms or areas used for the storage of hazardous materials shall be maintained, periodically inspected and tested. Test methods and frequency shall be in accordance with NFPA 72 listed in Chapter 45. Any required inspections and tests shall be performed in the presence of the Code Official. unless such requirement is waived by the Code Official. Fees for the attendance of the Code Official shall be charged in accordance with the fee schedule of the Code Enforcement Bureau.

901.6.14 ~~13~~ Periodic testing, inspection and maintenance. All fire pumps shall be inspected, tested and periodically inspected and tested in accordance with NFPA 25 listed in Chapter 45. Any required inspections and tests shall be performed in the presence of the Code Official, unless such requirement is waived by the Code Official. Fees for the attendance of the Code Official shall be charged in accordance with the fee schedule of the Code Enforcement Bureau.

901.6.15 ~~14~~ Periodic testing, inspection and maintenance. Water tanks, ~~and~~ fire service mains, and fire hydrants shall be periodically inspected, tested and maintained in accordance with NFPA 25 listed in Chapter 45. Any required inspections and tests shall be performed in the presence of the Code Official, unless such requirement is waived by the Code Official. Fees for the attendance of the Code Official shall be charged in accordance with the fee schedule of the Code Enforcement Bureau.

901.6.16 ~~15~~ Periodic testing, inspection and maintenance. All fire department connections shall be maintained, periodically inspected and tested and maintained in accordance with NFPA 25 listed in Chapter 45. Any required inspections and tests shall be performed in the presence of the Code Official, unless such requirement is waived by the Code Official. Fees for the attendance of the Code Official shall be charged in accordance with the fee schedule of the Code Enforcement Bureau.

901.6.17 Periodic testing, inspection and maintenance. All smoke control and smoke management systems shall be maintained, periodically inspected and tested and maintained in accordance with the requirements listed in Section 909.21. Any required inspections and tests shall be performed in the presence of the Code Official, unless such requirement is waived by the Code Official. Fees for the attendance of the Code Official shall be charged in accordance with the fee schedule of the Code Enforcement Bureau.

901.6.18 Periodic testing, inspection and maintenance. All access control systems shall be maintained, periodically inspected and tested and maintained in conjunction with any fire protection system inspection and test. Any required inspections and tests shall be performed in the presence of the Code Official, unless such requirement is waived by the Code Official. Fees for the attendance of the Code Official shall be charged in accordance with the fee schedule of the Code Enforcement Bureau.

(56) Chapter 9 Section 901.7 is amended by adding the following text after the first sentence to the first paragraph.

901.7 Systems out of Service. Fire watches shall be established and operate in accordance with Appendix B, "Requirements for a Fire Watch".

(57) Chapter 9, Section 903.5 is amended by adding the following text and subsections:

903.5 Testing and maintenance. Sprinkler systems shall be tested and maintained in accordance with this Section and Section 901.

903.5.1 Flow test. All systems shall be tested at the test pipe to determine that the water-flow detecting devices, including the associated alarm circuits are in proper working order. Dry pipe systems shall deliver water to the inspectors' test pipe in not more than 60 seconds.

903.5.2 Air test. Before the water supply for a dry pipe system is turned on and the system is placed into service, the system shall be tested with air pressure of at least 40 psi (276 k Pa) and be allowed to stand 24 hours with a maximum pressure loss of 1 ½ psi (10.34 k Pa). To prevent damaging the valve, the clapper valve of a differential-type dry pipe valve shall be held off the seat during any test at a pressure in excess of 50 psi (344.75 k Pa). Automatic air pressure maintenance devices shall be capable of restoring normal operating pressure to the system within 30 minutes, except for low-differential dry pipe systems where the maximum recovery time shall be 60 minutes.

(58) Chapter 9, Section 906 is amended by adding the following:

906.11 Maintenance. Maintenance of fire extinguishers shall be in accordance with NFPA 10, but no less than monthly visual checks, yearly service by a certified individual and hydrostatic test of cylinders every five years.

(59) Chapter 9, Section 912.3 is deleted and substitute the following:

912.3 Access. Immediate access to fire department connections shall be maintained at all times and without obstructions by fences, bushes, trees, walls or any other object for a minimum of 4 feet.

(59) Chapter 10, Section 1002.1 is ameneded by adding the following definition:

Overcrowding: A condition in which the number of occupants exceeds the total number approved persons permitted to occupy a structure at any one time.

(60) Chapter 10, Section 1008.1.8.7 , exception 3 is deleted.

(61) Chapter 10, Section 1024 is amended by changing the following code subsection:

1024.16 ~~1008.15~~ Accountability. A person responsible for controlling the occupancy capacity shall develop a system to manage the occupancy capacity for approval by the Director of Code Enforcement. This system shall be implemented outside the main entrance and consist of a mechanism to count persons as they enter a facility without restricting egress.

(62) Chapter 10, Section 1027 is amended by adding the following subsections:

1027.6 ~~1011.5~~ Overcrowding. A person shall not permit overcrowding or admittance of any person beyond the approved occupant load. The code official, upon finding overcrowded conditions or obstruction in aisles, passageways or other means of egress, or upon finding any condition which constitutes a hazard to life and safety, shall cause the occupancy, performance, presentation, spectacle or entertainment to be stopped until such a condition or obstruction is corrected and the addition of any further occupants prohibited until the approved occupant load is re-established.

1027.7 ~~1011.6~~ Operator responsibility. The operator or the person responsible for the operation of an assembly or educational occupancy shall check egress facilities before such building is occupied to determine compliance with this section. If such inspection reveals that any element of the required means

of egress cannot be accessed, is obstructed, locked, fastened or otherwise unsuited for immediate utilization, admittance to the building shall not be permitted until necessary corrective action has been completed.

(63) Chapter 11, Subsection 1101.3 is deleted and substitute the follows:

1101.3 Permits. Permits to operate aircraft-refueling vehicles, application of flammable or combustible finishes, and hot works shall be obtained from the Director of Code Enforcement in accordance with Table 107.2.

(64) Chapter 11, Section 1107 is amended by adding the following subsection:

1107.1.1 Permits. Permits shall be obtained from the Director of Code Enforcement in accordance with Table 107.2

(65) Chapter 11, Section 1107.2 is amended by adding the following subsection:

1107.2.1 Safety Personnel. A minimum of two trained safety personnel shall supervise the landing area during landing and takeoff. Safety personnel shall be dedicated to the landing area and ensure the area is clear of pedestrians and unauthorized personnel.

(66) Chapter 12, Subsection 1201.2 is deleted and substitute the following:

1201.2 Permits. Permits shall be obtained from the Director of Code Enforcement in accordance with Table 107.2.

(67) Chapter 13, Subsection 1301.2 is deleted and substitute the following:

1301.2 Permits. Permits shall be obtained from the Director of Code Enforcement in accordance with Table 107.2.

(68) Chapter 14, Section 1403 is amended by adding the following subsections:

1403.1.1 Plans. Floor plans designating location of heating equipment, heating fuel source, exits, fire extinguishers and fire department access points shall be submitted to the code official for approval prior to temporary heat operations are implemented.

1403.1.2 Membranes and Sheathing. All material utilized for isolation of heating areas shall be fire retardant.

(69) Chapter 14, Section 1404 is amended by adding the following sentence to the end of paragraph 1404.5:
Refer to Appendix B for additional fire watch requirements.

(70) Chapter 14, Section 1405 is amended by adding the following subsection:

1405.7 Refueling Tanks. All tanks utilized on construction sites shall be equipped with secondary containment and vehicle protection.

(71) Chapter 14, Section 1410 is amended by adding the following subsection:

1410.3 Building Access. At least two covered access points shall be provided. Each access point shall be posted with the building address, equipped with an approved fire safety map and constructed of approved fire retardant materials.

(72) Chapter 15, Section 1501 is amended by adding the following subsections:

1501.1 4. Floor surfacing or finishing operations.

1501.1 5. The application of dual-component coatings or Class I or II liquids when applied by brush or roller in quantities exceeding 1 gallon (4L).

(73) Chapter 15, Section 1501 is amended by adding the following subsection:

1501.2 Permits. Permits shall be obtained from the Director of Code Enforcement in accordance with Table 107.2 for spraying, dipping, and exterior spraying operations included within the scope of this chapter and Appendix F "Requirements for Exterior Spray Painting Operations" utilizing any amount of flammable or combustible liquids on any working day.

(74) Chapter 15, Section 1510 add the following subsection:

1510.1.1 Permits. Permits shall be obtained from the Director of Code Enforcement in accordance with Table 107.2

(75) Chapter 16, Section 1601.2 is deleted and substitute the following:

1601.2 Permits. Permits shall be obtained from the Director of Code Enforcement in accordance with Table 107.2.

(76) Chapter 17, Section 1701.2 is deleted and substitute the following:

1701.2 Permits. Permits shall be obtained from the Director of Code Enforcement in accordance with Table 107.2.

(77) Chapter 18, Section 1801.5 is deleted and substitute the following:

1801.5 Permits. Permits shall be obtained from the Director of Code Enforcement in accordance with Table 107.2.

(78) Chapter 19, Section 1901.2 is deleted and substitute the following:

1901.2 Permits. Permits shall be obtained from the Director of Code Enforcement in accordance with Table 107.2.

(79) Chapter 19, Section 1907 is amended by adding the following:

1907.1.1 Permits. Permits shall be obtained from the Director of Code Enforcement in accordance with Table 107.2.

(80) Chapter 20, Section 2001.2 is deleted and substitute the following:

2001.2 Permits. Permits shall be obtained from the Director of Code Enforcement in accordance with Table 107.2.

(81) Chapter 21, Section 2101.2 is deleted and substitute the following:

2101.2 Permits. Permits shall be obtained from the Director of Code Enforcement in accordance with Table 107.2.

(82) Chapter 22, Section 2201.2 is deleted and substitute the following:

2201.2 Permits. Permits shall be obtained from the Director of Code Enforcement in accordance with Table 107.2.

(83) Chapter 22, Ssection 2204.3.1 is amended to read as follows:

2204.3.1. General. Where approved, unattended self-service stations are allowed where the public does not have access. As a condition of approval, the owner or operator shall provide and be accountable for, daily site visits, regular equipment inspection and yearly maintenance.

(84) Chapter 22, Section 2206.2.3 is amended as follows:

2206.2.3 Above-ground tanks located outside, above grade. Above-ground tanks shall not be used for the storage of Class I, II or IIIA liquid motor fuels except where the public does not have access, and as provided by this section.

(1) Above-ground tanks used for outside, above-grade storage of liquid motor fuels shall be listed and labeled as protected above-ground tanks and be in accordance with Chapter 34. Such tanks shall be located in accordance with Table 2206.2.3.

(2) Above-ground tanks used for above-grade storage of Class II or IIIA liquids shall be protected above-ground tanks that comply with Chapter 34. Tank locations shall be in accordance with Table 2206.2.3. Tanks containing motor fuels shall not exceed 6,000 gallons in individual capacity or 18,000 gallons in aggregate capacity. Installations shall be separated from other such installations by not less than 100 feet (30 480mm).

(3) Tanks located at farms, construction projects or rural areas shall comply with Section 3406.2.

(85) Chapter 23, Section 2301 is amended by adding the following:

2301.2 Permits. Permits shall be obtained from the Director of Code Enforcement in accordance with Table 107.2.

(86) Chapter 24, Section 2401.2 is deleted.

~~**2401.2 Permits.** Tents and membrane structures having an area in excess of 200 square feet (19 m²) and canopies in excess of 400 square feet (37 m²) shall not be erected, operated or maintained for any purpose without first obtaining a permit from the Director of Code Enforcement in accordance with Table 107.2.~~

(87) Chapter 24, Section 2403.2 is amended by adding the following:
2403.2 Permits. ~~**Approval Required.**~~ Tents and membrane structures having an area in excess of 200 square feet (19 m²) and canopies in excess of 400 square feet (37 m²) shall not be erected, operated or maintained for any purpose without first obtaining a permit and approval from the Director of Code Enforcement in accordance with Table 107.2 ~~fire code official~~.

(88) Chapter 24, Section 2403.4 is deleted.

(89) Chapter 25, Section 2501 is deleted and add the following:

2501.2 Permits. Permits shall be obtained from the Director of Code Enforcement in accordance with Table 107.2.

(90) Chapter 25, Section 2503.1.2 is deleted.

~~2503.1.2 Permits. Permits shall be obtained from the Director of Code Enforcement in accordance with Table 107.2.~~

(91) Chapter 25, Section 2509.2 and 2509.3 is added:

2509.2 Indoor Storage of Scrap Tires and Tire Byproducts. The storage of scrap tires and tire by products exceeding 2,500 cubic feet (71m^3) shall require a permit.

2509.3 Permits. Permits shall be obtained from the Director of Code Enforcement in accordance with Table 107.2.

(92) Chapter 26, Section 2601.2 is deleted and substitute the following:

2601.2 Permits. Permits shall be obtained from the Director of Code Enforcement in accordance with Table 107.2.

(93) Chapter 26, Section 2604 is amended by adding the following:

2604.2.6.1 Exterior Operations. Areas where welding and cutting carts are moved or relocated out of an approved welding and cutting area, the welding and cutting carts shall be equipped with an approved 2A-20BC fire extinguisher. The fire extinguisher shall be securely mounted to the welding and cutting cart.

(94) Chapter 27, Subsection 2701.1 is amended as follows:

2701.1 - Exceptions 1, 4, and 8, 9 are deleted.

(95) Chapter 27, Section 2701.5 deleted and substitute the following:

2701.5 Permits. Permits shall be obtained from the Director of Code Enforcement in accordance with Table 107.2.

(96) Chapter 28, Subsection 2801.2 is deleted and substitute the following:

2801.2 Permits. Permits shall be obtained from the Director of Code Enforcement in accordance with Table 107.2.

(97) Chapter 29, Section 2901.3 is deleted and substitute the following:

2901.3 Permits. Permits shall be obtained from the Director of Code Enforcement in accordance with Table 107.2.

(98) Chapter 30, Section 3001.2 is deleted and substitute the following:

3001.2 Permits. Permits shall be obtained from the Director of Code Enforcement in accordance with Table 107.2.

(99) Chapter 31, Subsection 3101.2 is deleted and substitute the following:

3101.2 Permits. Permits shall be obtained from the Director of Code Enforcement in accordance with Table 107.2.

(100) Chapter 32, Subsection 3201.2 is deleted and substitute the following:

3201.2 Permits. Permits shall be obtained from the Director of Code Enforcement in accordance with Table 107.2.

(101) Chapter 33, Subsection 3301.1 is deleted and substitute the following:

3301.1 Scope. The equipment, processed and operations involving the manufacture, possession, storage, sale, use, maintenance and transportation of explosive materials shall comply with the requirements of this code, NFPA 495 and DOTn 49 CFP listed in Chapter 45 of this code.

Exceptions:

1. The transportation and use of explosives by federal or state military agencies or federal, state or municipal agencies while engaged in normal or emergency performance of duties.
2. The manufacture and distribution of explosive material to, or storage of such materials by military agencies of the United States.
3. The use of explosive materials in medicines and medicinal agents in the forms prescribed by the U.S. Phamacopeia or the National Formulary.
4. Pyrotechnics such as flares, fuses and railway torpedoes.
5. Common fireworks in accordance with this Chapter 31.
6. The possession, transportation and use of not more than 15 pounds of black powder or 15 pounds r (6.18 kg) 20 pounds of smokeless powder and 1,000 small arms primers for hand loading of small arms ammunition for personal use.
7. The storage, handling, transportation or use of explosives or blasting agents pursuant to provisions of Title 45.1 of the Code of Virginia.

(102) Chapter 33, Section 3301.2 is deleted and substitute the following:

3301.2 Permits. Permits shall be obtained from the Director of Code Enforcement in accordance with Table 107.2 for all blasting operations, firework aerial displays, pyrotechnic events before an audience, the transportation , manufacture, possession, use, storage of explosives and fireworks and the operation of a terminal for handling explosive material and the delivery to or receipt from a carrier at a terminal between sunset and sunrise.

(103) Chapter 33, Section 3301.1.3 delete the following:

Delete exception 1, 2 and 4.

(104) Chapter 33, Section 3302.1. The definition of Fireworks is deleted and replaced with the following:

3302.1. Fireworks. "Fireworks" shall mean and include any combustible or explosive composition, or any substance or combination of substances or articles prepared for the purpose of producing a visible or an audible effect by combustion, explosion, chemical reaction , deflagration or detonation and shall include blank cartridges, toy pistols, toy cannons, toy canes or toy guns in which explosives are used, the type of balloons which require fire underneath to propel them, firecrackers, torpedoes, skyrockets, model rockets, Roman candles, Daygo bombs, sparklers, pinwheels, poppers, or other devices containing any explosive or flammable compound, or any tablets or other devices containing any explosive; except that the term "fireworks" shall not include auto flares, paper caps containing not in excess of an average of twenty-five hundredths of a grain of explosive content per cap manufactured in accordance with the DOT regulations for packing and shipping as provided therein, and toy pistols, toy cannons, toy canes, toy guns or other devices for use of the caps, the sale and use of which shall be permitted at all times. Pyrotechnics (special fireworks) shall comply with the applicable provisions of this Chapter.

(105) Chapter 33, Section 3303.2 is amended by adding the following definition:

3303.2.1 Records. Daily records shall be kept of the amount of explosives received from a supplier and the amount delivered to the magazine. A daily record shall be kept of the amount of explosives removed from the magazine for daily use and the amount returned to the magazine. This record will be kept within the magazine so that, on inspection of the magazine, an inventory for all explosives can be made. The inventory shall be separated as to the different types of explosives stored and used. Forms for these records shall be approved by the Director of Code Enforcement.

(106) Chapter 33, Section 3304.5 is amended by adding the following subsection:

3304.5.2.1 Type 2 magazines: Type 2 magazines may be used for temporary storage of explosives at the site of blasting operations where the amount constitutes not more than one day's supply for use is current operations. All explosives not used in the day's operation shall be returned to a Type 1 magazine at the end of the work day for overnight storage. In no case shall a Type 2 magazine be used for overnight storage unless approved by the Director of Code Enforcement. Type 2 magazines shall be allowed only in the I/Industrial Zone.

(107) Chapter 33, Section 3306.4 is amended by adding the following:

3306.4.1 ~~3306.4.2~~ **Small arms primers and ammunition.** No more than 10,000 small arms primers and ammunition shall be stored in occupancies limited to Groups R-3 and R-5.

(108) Chapter 33, Section 3308.1 is deleted and amended by substituting the following subsections:

3308.1 General.

(a) This chapter shall apply to fireworks as hereinafter defined in 3302.1

(b) Nothing in this chapter shall be construed to prohibit: (i) any resident wholesaler, dealer or jobber to sell at wholesale any fireworks as are not herein prohibited; (ii) the sale of any kind of fireworks, provided they are to be shipped directly out of the state, in accordance with the Department of Transportation (DOT) regulations covering the transportation of explosives and other dangerous articles; (iii) the use of fireworks by railroads or other transportation agencies for signal purposes or illumination; or (iv) the sale or use of blank cartridges for a show or theater or for signal or ceremonial purposes in athletics or sports or fur use by military organizations or the police department. Fireworks permitted by this section shall be stored in accordance with this Chapter:

3308.1.1 Manufacture, sale, possession and discharge of fireworks.

(a) The manufacture of fireworks is prohibited within the city.

(b) It shall be unlawful for any person to store, offer for sale, expose for sale, sell at retail, use, possess, or explode any fireworks except as otherwise provided in subsections (c) through (f) ~~of subsection 3308.1.2.~~

(c) The Director of Code Enforcement shall adopt rules and regulations for the granting of permits for supervised public displays of fireworks. The permits shall be issued upon application to the Director of Code Enforcement after the filing of a bond by the applicant as provided in subsection 3308.1.2. Every such display shall be handled by an experienced and competent operator approved by the Director of Code Enforcement and shall be of such composition, character and so located, discharged or fired as will, in the opinion of the Director of Code Enforcement after proper inspection, not be dangerous or hazardous to any property or person.

(d) Application for permits shall be made in writing at least 45 days in advance of the date of the display. After the permit had been granted, sale, possession, use and distribution of fireworks for

display purposed shall be lawful for the purpose only. No permit granted hereunder shall be transferable. Applications for permit shall be in accordance with the requirements in Appendix C, "Requirements for Fireworks Displays".

(e) The sale, possession, use and distribution of fireworks for display purposes shall be conducted so as to be safe to persons and property. Evidence that the sale, possession, use and distribution of fireworks for display purposes has been conducted in accordance with the applicable provision of this chapter of the city code and the applicable standards contained in chapter 45 of the Virginia Statewide Fire Prevention Code shall be evidence that such sale, possession, use and distribution of fireworks fore display purposed provides safety to persons and property.

(f) The Director of Code Enforcement shall adopt rules and regulation for the use of model rockets. The design, construction and use of model rockets shall be safe to persons and property. Evidence that the design, construction and use of model rockets is in accordance with the currently adopted edition of NFPA 1122, "Code for Model Rocketry", published by the National Fire Protection Association, shall be evidence that any design, construction and use provides safety to persons and property.

3308.1.2 Permits. Permits shall be obtained from the Director of Code Enforcement in accordance with Table 107.2.

3308.1.3 Disposal of unfired fireworks. Any fireworks that remain unfired after the display is concluded shall be immediately disposed of in a manner safe for the particular type of fireworks remaining. Aerial fireworks shall be destroyed in an approved manner prior to removal form mortar tubes.

3308.1.4 Seizure of fireworks. The Director of Code Enforcement or designee shall seize, take, remove or cause to be removed at the expense of the owner, all fireworks offered for sale, stored or held in violation of this code.

(109) Chapter 33, Section 3301.11 is amended to read:

3308.11 Retail display and sale. The retail display or sale of fireworks is prohibited.

(110) Chapter 33, add Section 3309 Transportation as follows:

3309.1 Prohibited transportation. Explosive materials shall not be carried or transported on a public conveyance or vehicle carrying passengers for hire.

3309.2 Vehicle design. Vehicles transporting explosive materials shall be strong enough to carry the load and shall be in good and safe mechanical condition. The floors shall be tight and have no exposed spark producing surface on the inside of the body. Where explosive materials are transported on a vehicle with an open body, the explosive material shall be stored in a portable magazine or closed container securely fastened to the vehicle body.

3309.3 Vehicle prohibitions. The attachment of a trailer behind a truck, tractor of semi trailer combination for transporting explosive materials is prohibited. The transport of explosive materials in any pole trailer is prohibited. Exception: Such transport is permitted by DOTn 49 CFR listed in Chapter 45 of this code.

3309.4 Vehicle restrictions. Vehicles containing explosive materials shall not be taken into a garage or repair shop for repair or storage.

3309.5 Vehicle contents. Only those dangerous articles authorized to be loaded with explosive materials in accordance with the provisions of this chapter shall be carried in the body of a vehicle transporting explosive materials.

3309.6 Vehicle inspections. The person to whom a permit has been issued to transport explosive materials over the streets and highways of the city shall inspect each vehicle used for such purposes daily, to ensure that:

1. Fire extinguishers are filled and in working order.

2. All electrical wiring is completely protected and securely fashioned to prevent short circuiting.

3. The motor, chassis, oil pan and body undersides are reasonably clean and free of excess grease and oil.

4. Both the fuel tank and fuel line are secure and free from leaks.

5. The brakes, lights, windshield wipers, horn and steering mechanism are functioning properly.

6. The tires are property inflated, have proper tread depth and are free of defects.

7. The vehicle is otherwise in proper operating condition and acceptable for transporting explosive materials.

8. The operator shall maintain all inspection reports in vehicle at all times.

3309.6.1 **Prior Inspection.** Vehicles routinely transporting explosive materials within the city shall be inspected by the Code Official prior to entering the city limits. Inspection shall occur at six month intervals. The Code Official shall issue a fire prevention permit to all approved vehicles.

3309.7 Vehicle signs. Vehicles transporting any quantity of explosive materials shall display all placards, signs lettering or numbering in accordance with DOTn 49 CFR listed in Chapter 45.

3309.8 Separation of detonators and explosives. Detonators shall not be transported in the same vehicle with Class A or Class B explosive materials or blasting agents, except as permitted by DOTn 49 CFR listed in Chapter 44.

3309.9 Vehicle traveling clearances. Vehicles transporting explosive materials and traveling in the same direction shall not be driven within 300 feet (91,440 mm) of each other.

3309.10 Vehicle routing. The route followed by vehicles transporting explosive materials shall not pass through congested areas or heavy traffic, except as permitted by the Code Official. A transportation plan identifying the route of travel shall be submitted to the Code Official for review and approval.

3309.11 **Restricted transportation**. Explosive materials shall not be transported through any vehicular tunnel or subway or over any bridge, roadway or elevated highway through or over which such transport is prohibited.

3309.12 Portable fire extinguishers. Every vehicle transporting explosive materials shall be equipped with portable fire extinguishers capable of being readily accessed, filled and ready for immediate discharge.

3309.12.1 Small trucks. At least two portable fire extinguishers with a minimum 2-A:40-B:C rating shall be provided on trucks with a gross vehicle weight of 14,000 lbs. (6356 kg) or greater.

3309.13 Operating precautions. No person shall carry matches of any other flame producing device, or carry unauthorized firearms or cartridges while in or near a vehicle transporting or storing explosive materials. No person shall drive, load or unload such a vehicle in a careless or reckless manner.

3309.14. Spark protection. Spark producing metal or tools, oils, matches, firearms, electric storage batteries, flammable materials, acids, oxidizers or corrosives shall not be transported or stored in the body of any vehicle being used to store or transport explosive materials or blasting agents.

3309.15 Unattended vehicles. Vehicles being used to store or transport explosive materials shall not be left unattended at any time within the city. No unauthorized person shall ride or be permitted to ride on any such vehicle.

3309.15.1 Responsibilities. The authorized vehicle attendant shall remain awake and alert at all times.

3309.16 Vehicle parking and transfer. Vehicles being used to transport explosive materials shall not be parked, attended or unattended on any street or road withing the city or adjacent to or in proximity to any building or structure, including a bridge or tunnel. or other place where persons work, congregate or assemble, prior to reaching the vehicles' destination. Explosive materials shall not be transferred from one vehicle to another except in an emergency and under the supervision of the Director of Code Enforcement.

3309.16.1 Emergency conditions. In the event a vehicle being used to transport explosive materials breaks down, is involved in an accident or catches on fire, the city police and fire department shall be notified immediately. Only in the event of a breakdown or accident shall explosive materials be transferred from the disabled vehicle to another and then only by proper and qualified personnel and under the supervision of the Director of Code Enforcement.

3308.17 Delivery. Delivery of explosive materials shall only be made to authorized persons and into approved magazines or approved temporary storage or handling areas.

3309.18 Explosive materials at terminals. The Code Official shall designate the location and specify the maximum quantity of explosive materials which are to be loaded, unloaded, reloaded or stored at any given time at each terminal where such operations are permitted.

3309.19 Carrier responsibility. A carrier shall immediately notify the Code Official when explosive materials or blasting agents are to be transported within the City.

3309.20 Notice to consignee. A carrier shall immediately notify the consignee of the arrival of explosive materials at the carrier's terminal.

3309.21 Consignee responsibility. Upon notification that a shipment of explosive materials has arrived at a terminal, the consignee shall remove such materials to a storage area complying with the provisions of this chapter. Such removal shall be accomplished within 48 hours after receipt of notice, excluding Saturdays, Sundays and legal holidays.

(111) Chapter 34, Section 3401.4 is deleted and substitute the following:

3401.4 Permits. Permits shall be obtained from the Director of Code Enforcement in accordance with Table 107.2.

(112) Chapter 34, Section 3404 is amended by adding the following subsections:

3404.2.7.12 Spill prevention plan. The owner or operator of any storage facility comprised of one or more tanks above or below ground with a total capacity of 5,000 gallons or more shall prepare and maintain on site a plan for product spill prevention, control and countermeasures certified by a professional engineer registered in the Commonwealth of Virginia and approve by the Director of Code Enforcement. The certification of the professional engineer shall be that the plan is in substantial compliance with the spill prevention, control and countermeasures plan requirements of the Environmental Protection Agency contained in part 112 of title 40, Code of Federal Regulations. A plan that has been approved by the

Environmental Protection Agency may be submitted to the Director of Code Enforcement in lieu of one certified by a professional engineer.

3404.2.7.13 Clean-up of spill and leaks. The owner, tenant or other person in control of premises where a spill of leak has occurred shall be responsible for taking immediate and effective countermeasures to contain the spill, clean up the flammable or combustible liquid and dispose of all waste in an approved manner. Upon notification by the city that is has determined that such person lacks the capability or intent to perform these countermeasures, the person notified shall have a reasonable opportunity to elect either to contract with another for the performance of these countermeasures or to join the city in a contract with another for such work. In either case, the person shall pay the entire cost of the work. If a person who has received a notice from the city under this section fails to inform the city of his election within the time specified in the notice, the city may proceed without delay to undertake the required countermeasures, and to charge the owner, tenant or other person in control of the premises the entire cost of such work.

3404.2.7.14 Monitoring wells. Two permanent monitoring wells shall be installed in opposing corners of the tank field on all new installation after the effective date of this regulation. These wells shall extend to a minimum depth of two feet below the bottom of the tanks in the tank field. These wells shall be a minimum of four inches schedule 40 PVC screen pipe or equivalent and shall be flush with covering surface and covered with standard metal cover and gravel packed to prevent clogging. The screened section shall have a minimum size of .025 inch.

3404.2.7.15. Tank closure. All underground storage tanks permanently removed from service shall have a site assessment in accordance with the regulation of the Virginia Statewide Water Control Board. A copy of this assessment must be submitted to the Fire Official and to the Virginia Water Control Board if it so requires. A minimum of three soil samplings should be obtained to complete this assessment. Previously used tanks which are removed from the ground shall not be reinstalled unless the original manufacturer certifies that they are suitable for service. The manufacturers written certification must be kept on file at the facility and be available for inspection by the Director of Code Enforcement.

3404.2.7.16 Product inventory. All buried tanks installed after this regulation is effective shall have provision for taking direct measurements of readings of content level by the stick method. Liquid levels of storage tanks shall be measured by the operator each day of operation and compared with pump meter readings taken on receipt of the product. These records shall be kept in a log book and be available for reasonable inspection by the Director of Code Enforcement and/or his representative. Loss of product above normal evaporation (one-half of one percent of pump meter sales readings) shall be reported immediately to the Director of Code Enforcement. Records shall be retained for two years. This period shall be extended upon request of the Director of Code Enforcement.

3404.2.7.17 Special equipment. High liquid level gauges or alarm systems as well as pump cut-off devices shall be installed by the owner or the authorized operator in all oil storage tanks wherever in the judgement of the Director of Code Enforcement there is a possibility that product may be lost by overflowing. Since these emergency devices can fail to operate, their use for spill prevention purposes shall be considered only as auxiliary and supplementary to the use of personnel engaged in a transfer of fill operation.

(113) Chapter 34, Section 3406 is amended by adding the following subsection:

3406.6.5 Maintenance. Tank vehicles operating within the city while in transit into or out of the city shall be maintained in accordance with the federal regulations contained in parts 390 through 397 of title 49, Code of Federal Regulations. Part 397.3 of Title 49 requires that all motor vehicles carrying hazardous materials comply with state and local laws, ordinances and regulations, unless the regulations of the U.S. Department of Transportation apply and are more strict. Pursuant to the authority granted in section 18.2-278.4 of the Code of Virginia (1950), as amended, any duly sworn law enforcement officer of the city, including the Chief Fire Marshal, Chief Deputy Fire Marshal, and any Deputy Fire Marshals may halt any tank vehicle which is observed to have a condition or characteristic which indicates that there is a violation of city, state

or federal regulations governing the transportation of hazardous materials. The vehicle may be detained long enough to determine whether the permits required for transporting hazardous materials have been obtained, whether the cargo is secure, and whether the observed condition or characteristic presents a immediate threat of a transportation related spill or other catastrophic event. The tank vehicle may resume operation if it is found to be in good repair and free of leaks in accordance with NFPA 385. If that finding is not made, the vehicle shall not be detained any longer than necessary for the officer or official to determine that arrangements for the repair of the vehicle where situated of for its removal to a safe place and repair there, whichever in the judgement of the officer or official if appropriate, are made. Upon refusal of the operator to make arrangements required by the officer or official, the vehicle shall be impounded and held until the repair is made or until the officer or official is certain that it will be made.
(Ord. No. 4243, 3/16/02, Sec.1)

(114) Chapter 35, Section 3501.2 is deleted and substitute the following:

3501.2 Permits. Permits shall be obtained from the Director of Code Enforcement in accordance with Table 107.2.

(115) Chapter 36, Section 3601.2 is deleted and substitute the following:

3601.2 Permits. Permits shall be obtained from the Director of Code Enforcement in accordance with Table 107.2.

(116) Chapter 36, Section 3606.2 is amended by adding the following section:

3606.1.2 Permits. Permits shall be obtained from the Director of Code Enforcement in accordance with Table 107.2.

(117) Chapter 37, section 3701.2 is deleted and substitute the following:

3701.2 Permits. Permits shall be obtained from the Director of Code Enforcement in accordance with Table 107.2.

(118) Chapter 38, section 3801.2 is amended as follows:

3801.2 Permits. Permits shall be obtained from the Director of Code Enforcement in accordance with Table 107.2.

(119) Chapter 38, section 3803.2.2.1 is amended by adding the following subsection:

3803.2.2.1. Permits. Permits shall be obtained from the Director of Code Enforcement in accordance with Table 107.2 for the storage and operation of industrial vehicles and floor maintenance machines.

(120) Chapter 39, section 3902.1 is deleted and substitute the following:

3901.2 Permits. Permits shall be obtained from the Director of Code Enforcement in accordance with Table 107.2.

(121) Chapter 40, section 4001.2 is deleted and substitute the following:

4001.2 Permits. Permits shall be obtained from the Director of Code Enforcement in accordance with Table 107.2.

(122) Chapter 41, section 4101.2 is deleted and substitute the following:

4101.2. Permits. Permits shall be obtained from the Director of Code Enforcement in accordance with Table 107.2.

(123) Chapter 42, section 4201.2 is deleted and substitute the following:

4201.2. Permits. Permits shall be obtained from the Director of Code Enforcement in accordance with Table 107.2.

(124) Chapter 43, section 4301.2 is deleted and substitute the following:

4301.2 Permits. Permits shall be obtained from the Director of Code Enforcement in accordance with Table 107.2.

(125) Chapter 44, section 4401.2 is deleted and substitute the following:

4401.2 Permits. Permits shall be obtained from the Director of Code Enforcement in accordance with Table 107.2.

Section 2. That this ordinance shall become effective upon the date and at the time of its final passage.

WILLIAM D. EUILLE
Mayor

Introduction: 6/13/06
First Reading: 6/13/06
Publication:
Public Hearing:
Second Reading:
Final Passage:

C:\Documents and Settings\jhenders\Local Settings\Temp\notesC9812B\fire code 5-06.wpd

ORDINANCE NO. 4455

AN ORDINANCE to amend and re-ordain Article B (FIRE PREVENTION) of Chapter 2 (FIRE PROTECTION AND PREVENTION), Title 4 (PUBLIC SAFETY), of The Code of the City of Alexandria, Virginia, 1981, as amended.

THE CITY COUNCIL OF ALEXANDRIA HEREBY ORDAINS:

Sec. 1.
That Article B of Chapter 2, Title 4 of The Code of the City of Alexandria, Virginia, 1981, as amended, be and the same hereby is amended and re-ordained to read as follows:

ARTICLE B

Fire Prevention

Sec. 4-2-11 Title.

This article shall be known as the Fire Prevention Code of the City of Alexandria, Virginia.

(1) Section 4-2-12, Adoption of Virginia Statewide Fire Prevention Code is amended to read:

Sec. 4-2-12 Adoption of Virginia Statewide Fire Prevention Code.

There is hereby adopted and incorporated as if fully set out in this article, the Virginia Statewide Fire Prevention Code, as promulgated in 2003 and as thereafter amended by the Virginia Board of Housing and Community Development, except such portions of the Virginia Statewide Fire Prevention Code as are deleted, modified or amended by section 4-2-21 of this article.

Sec. 4-2-13 Same - official copy

One copy of the Virginia Statewide Fire Prevention Code and the ordinances adopted deletions, modifications and/or amendments thereto shall be manually signed on its cover by the mayor and the fire official and shall be filed and kept at all times in the office of the city clerk.

Sec. 4-2-14 Definition of fire official, fire marshal and code official

Whenever the terms "fire official," "fire marshal" and code official" are used in this article or the Virginia Statewide Fire Prevention Code, they shall mean the city's Director of Code Enforcement.

(2) Section 4-2-15, Duties of the fire marshal and deputy fire marshals is amended by deleting and adding the following language in the title and sections A through D:

Sec. 4-2-15 Duties of the fire marshal, assistant fire marshals, deputy fire marshals and fire inspectors.

(a) The director of code enforcement fire marshal, assistant fire marshals, all deputy fire marshals, all fire inspectors and other authorized employees of the city shall enforce the applicable provisions of this article.

(b) The city manager shall appoint the fire marshal, assistant fire marshals, deputy fire marshals and fire inspectors.

(c) The chief of the fire department of the city may designate any members of the fire department as deemed necessary as temporary fire inspectors to make fire safety inspections pursuant to this article.

(d) (1) The fire marshal, assistant fire marshals and deputy fire marshals shall have the same police powers as a sheriff, police officer or law enforcement officer, and in addition to such other duties as may be prescribed by law, shall have the primary responsibility of investigation and prosecution of all offenses involving fire, fire bombings, bombings and attempts to commit such offenses; possession and manufacture of explosive devices, substances and fire bombs; storage, use and transportation of hazardous materials and hazardous wastes and the investigation of all releases of hazardous materials and wastes and all other environmental offenses; false alarms relating to such offenses, and may investigate and prosecute all other criminal or civil offenses under local, state or federal law arising out of or during the investigation of the enumerated offenses, and out of or during such other investigations, and prosecutions as may be approved by the city manager.

(2) The police powers granted in this section shall not be exercised by the fire marshal, assistant fire marshals or any deputy fire marshal until such person has satisfactorily completed a course for fire marshals with police powers, designed by the Department of Fire Programs in cooperation with the Department of Criminal Justice Services and approved by the Virginia Fire Services Board.

(3) The fire marshal, assistant fire marshals, and deputy fire marshals with police powers shall continue to exercise such powers only upon satisfactory participation in in-service and advances courses and programs designed by the Department of Fire Programs in cooperation with the Department of Criminal Justice Services, and approved by the Virginia Fire Services Board.

(4) The fire marshal, assistant fire marshals and deputy fire marshals shall have the authority to enforce the *Virginia Statewide Fire Prevention Code, Virginia Maintenance Code*, the *Uniform Statewide Building Code, Code of Virginia* and applicable sections of the *City of Alexandria Code.*

(3) Section 4-2-15.1 is added:

Sec.4-2-15.1 Duties of the Fire Inspectors

(a) The term "fire inspector" shall mean field personnel that have authority to conduct inspections, implements and enforces the *Virginia Statewide Fire Prevention Code, Virginia Maintenance Code*, and applicable sections of the *City of Alexandria Code.*

(b) The appointed fire inspector shall have the responsibility of issuing Virginia Uniform Summons and parking citations in accordance with the *Code of Virginia, Virginia Statewide Fire Prevention Code, Virginia Maintenance Code*, the *Uniform Statewide Building Code* and applicable sections of the *City of Alexandria Code*. Fire Inspectors shall not be granted police powers or implement custodial arrests. The powers granted in this section shall not be exercised by the fire inspectors until such person has satisfactorily completed a course for fire inspectors with summons powers, designed by the Department of Fire Programs in cooperation with the Department of Criminal Justice Services and approved by the Virginia Fire Services Board.

Sec. 4-2-16 Unlawful boarding or tampering with fire department vehicles.

It shall be unlawful for any person, without proper authorization to cling, attach to, climb upon or board or swing upon any fire department vehicle, whether the vehicle is in motion or at rest, to sound any warning device thereon or to manipulate, tamper with or destroy any lever, valve, switch, starting device, brake, pump or any equipment, protective clothing or tool or a part of the fire department vehicle.

(4) Section 4-2-17, Tampering with fire protection devices; failure to report, or delay alarm for fire is amended by adding the following language and Item D:

Sec. 4-2-17 Tampering with fire protection devices; failure to report, or delaying alarm of fire.

(a) It shall be unlawful for any person to tamper with, damage, destroy, use without just cause or authorization, or to hinder the use of any fire alarm system, fire detection system, fire suppression system, fire protection system, or fire extinguisher installed in any building or any structure within the city.

(b) It shall be unlawful for any person knowingly to delay or cause to be delayed an alarm of fire, or to fail to report an alarm of fire to the fire department.

(c) When a fire or evidence of the occurrence of a fire is discovered, even though it has apparently been extinguished, the person making such discovery shall immediately report the same to the fire department.

(d) It shall be unlawful for any person to reset any fire protection system without prior authorization from the director of code enforcement or his designees. However, the following persons are excepted from this requirement: (1) Fire suppression personnel, (2) Fire protection personnel conducting inspection, testing, service or maintenance on fire protection system during emergencies, and (3) Law enforcement personnel

(5) Section 4-2-17.1, Stairway Identification is amended to read:

Sec. 4-2-17.1 Stairway Identification.

An identification system as approved by the fire official shall be provided at each landing in all interior exit stairways connecting more than three stories, identifying the floor level, the level of discharge to the exterior of the structure, the name of designation of the stairway within the structure, and whether there is access to the roof of the structure from the stairway. The identification shall be located five feet (1,525 mm) above the finished floor landing, at a location, which is readily visible within the stairway and will not be obstructed by the operation of any door into the stairway.

Stairway identification shall conform to the requirements established in Sec. 4-2-21, Changes in Virginia Statewide Fire Prevention Code, Chapter 1, section 103.4, Appendix D, "Requirements for Stairway Identification".

(6) Section 4-2-18, Fire Hydrant and Water mains is amended as follow:

Sec. 4-2-18 Fire Hydrant and water mains.

(a) It shall be unlawful for any person to use, tamper with, damage or destroy any fire hydrant, valve or water main within the city, except that the fire department may use fire hydrants for fire fighting or training purposes, and persons who have obtained a permit as provided for in this section from the Code Enforcement Bureau may use the hydrants in accordance with the terms of the permit.

(b) Application for a permit for use of fire hydrants shall be made to the Code Enforcement Bureau on forms provided for this purpose. Any permit shall be subject to the conditions and specifications imposed by the Code Enforcement Bureau for the purpose of protection equipment and preventing water leakage. No permit shall be issued unless approval to use water shall first have been obtained for the Virginia-American Water Company. A separate permit shall be required for each hydrant used and each time the hydrant is used. A fee of $100.00 ($10 for charitable or nonprofit groups) will be charges for each permit issued in accordance with Table 107.2. A permit holder shall be responsible for the costs of labor and materials for any repair or replacement needed after hydrant use. A permit must be in the possession of the actual user at the time of use.

(c) No person shall plant, erect or place any obstruction within four feet of any hydrant nor shall a person stop, stand or cause a motor vehicle to be placed within 15 feet of a hydrant.

(d) No person shall plant erect or place any obstruction within 4 feet of any other fire department connection point, whether mounted on the exterior of a structure of freestanding. All such connections, which are mounted on a building shall be identified by a sign.

Sec. 4-2-19 Impersonation.

It shall be unlawful for any person falsely to use a fire department badge, uniform or credentials to identify himself as, or otherwise to impersonate a fire marshal, a fire officer, a fire fighter, a paramedic, an inspector or another authorized representative of the fire department.

Sec. 4-2-20 Reserved.

Sec 4-2-21 Changes in Virginia Statewide Fire Prevention Code.

The Virginia Statewide Fire Prevention Code, adopted by the city in section 4-2-12, is deleted, modified, or amended in the following respects:

(1) Chapter 1, section 101.1 is amended by deleting and adding the following:

101.1 Title. The regulations set forth herein, as modified and amended in Section 4-2-21 of The Code of the City of Alexandria, together with the additional regulations in article B of chapter 2, title 4 of that code, shall be known as the Fire Prevention Code of the City of Alexandria, Virginia, and are herein referred to as such or as "the code".

(2) Chapter 1, section 103 is amended by adding the following:

103.4. International Fire Code Appendices. IFC, 2003 Edition, Appendices A, B, C, D, and F are deleted. Appendix H is added. The following appendices are hereby incorporated as fully enforceable provisions of this code:

(3) Appendix A, Water and Fire Requirements for Site Plans and New Construction is amended and by deleting and adding the following:

APPENDIX A - WATER AND FIRE REQUIREMENTS FOR SITE PLANS AND NEW CONSTRUCTION

SECTION A101 - GENERAL

A101.1 Scope. Appendix A, Water and Fire Requirements for Site Plans and New Construction provides specific information concerning various fire protection related issues including, fire hydrant and fire main requirements, site plan requirements, emergency vehicle access and easements (emergency vehicle easement requirements), and fire flow calculations. In addition, this document provides information concerning fire department construction site requirements, hydrant permits and acceptance of emergency vehicle easements from the public.

A101.2 References. *Code of Virginia, Uniform Statewide Building Code, Statewide Fire Prevention Code with City of Alexandria amendments, Design and Construction Standards - Department of Transportation and Environmental Services, and Virginia-American Water Company Specifications for Pipeline Installation and Street Restoration.*

A101.3 Alternatives. Alternative approaches to these requirements will be considered on a case-by-case basis and are subject to the review and approval by the Director of Code Enforcement.

SECTION A102 - FIRE FLOW REQUIREMENTS

A102.1 Fire Flow Requirements. Fire flow requirements shall be based on the methodology described in the Insurance Services Office's (ISO) Fire Suppression Rating Schedule. This methodology considers building construction, occupancy, adjacent exposed buildings and communication paths between buildings. (See Section A102.10 - Fire Flow Analysis for guidance)

A102.2 One and Two Family Dwellings. The fire flow required shall be based on the minimum exposure distance listed in Table A102.1:

Table 102.1 - MINIMUM EXPOSURE DISTANCE

Minimum Exposure Distance	Fire Flow (GPM)
0 ft. - 10 ft.	1,500 - 2,000
11 ft. - 30 ft.	1,000 - 1,500
31 ft. and greater	- 1,000

A102.3 Townhouses or Mulitplex Units. Townhouses or multiplex units (residential or professional) where individual units are not separated by two-hour fire, party, or separation walls require a flow of 2,500 GPM. Townhouses (residential or professional) where individual units are separated by a minimum one-hour fire, party or separation walls and approved fire sprinkler systems establish fire flow requirements based on calculations for **Other Uses** as described in Section A102.4. Multiplex units (residential or professional) where individual units are separated by two-hour fire, party, or separation walls and approved fire sprinkler systems establish fire flow requirements based on calculations for **Other Uses** as described in Section A102.4.

Note: The Code Enforcement Bureau reserves the right to increase the required fire flow if building construction issues or access factors present an unusual fire or life safety challenge.

A102.4 Other Uses. Fire flow requirements established by the procedures and formula for needed fire flow delineated below is based on the Insurance Services Office (ISO) methodology.

A102.5 Computation of Needed Fire Flow. The needed fire flow shall be calculated at a minimum 20-psi residual pressure on the water system.

The basic formula is: $NFFi = (Ci)(Oi)(X + P)i$

Ci = Construction factor where: $Ci = 18F - \sqrt{Ai}$

F = coefficient related to type of construction:

- F = 1.5 for wood frame construction (2003 VUSBC Types VA & VB)
- F = 1.0 for ordinary construction (2003 VUSBC Types IIIA& IIIB)
- F = 0.9 for heavy timber construction (2003 VUSBC Types IV)
- F = 0.8 for noncombustible construction (2003 VUSBC Types IIA and IIB)
- F = 0.6 for fire-resistive construction (2003 VUSBC Types IA and IB)

A (effective building area) = the total area of the largest floor plus:

- Construction type I & II -25% of the area not exceeding the other two largest floors when all vertical openings have at least 1 ½ -hour fire-rated protection.

or,

- 50% of the area not exceeding eight other floors when the vertical openings are unprotected or have less than 1 ½-hour protection.

- Construction Type III through V - 50% of all other floors.

NOTE: In buildings with mixed construction a value Cm shall be calculated for each class of construction using the effective area of the building. The Cm values are multiplied by their individual percentage of the total area. The Ci applicable to the entire building is the sum of these values. However, the value of the Ci shall not be less than the values for any part of the building based upon its own construction and area.

Oi = Occupancy Factor, which reflects the combustibility of the occupancy.

- = 0.75 for non-combustible
- = 0.85 for limited combustible
- = 1.00 for combustible
- = 1.15 for free burning
- = 1.25 for rapid burning

(X + P)i - Exposure and Communication Factors

$(X+P)i = 1.0 + (Xi + P_i)$ (with a maximum value of 1.60)

Values for X and P are determined from Tables A102.3 and A102.4 containing factors for type of separation or connections and separation distance. (See Section A102.10 - Example Fire Flow Calculation for guidance).

Add 500 gpm to total fire flow for buildings with wood construction members, sheeting, shingles, or roof.

A102.6 Minimum Flow. Fire flow shall never be less than 500 gpm for a structure. Fire flow required for single-family detached dwellings shall never be less that 1,000 gpm. Both values are absolute minimums after all reductions are taken.

A102.7 Maximum Flow. The maximum fire flow shall be as listed in Table A102.2, except for structures requiring special consideration as described in Section A102.8.

TABLE 102.2 - MAXIMUM FLOW

Construction Type	Flow in gpm
III, IV, or V	8,000
I or II	6,000

A102.8 Reductions Based on Sprinkler Protection. The value obtained from the formula in Section A102.5, COMPUTATION OF NEEDED FIRE FLOW, may be reduced by 50 percent when the structure under consideration is protected throughout with an approved automatic sprinkler system in accordance with the *Virginia Uniform Statewide Building Code* and the currently referenced edition of NFPA 13 *Standards for the Installation of Sprinkler Systems* or other approved fire sprinkler system design and installation codes. Reductions are not permitted for structures with partial protection. Reductions for installations based on NFPA 13D or NFPA 13R designs, shall be

approved by the Director of Code Enforcement on a case-by-case basis.

A102.9 Special Consideration. The above calculation procedures do not apply to the following, which require special consideration and direct consultation with the Code Enforcement Bureau:

a. Structures containing a group H fire area
b. Lumber yards
c. Petroleum Storage
d. Refineries
e. Chemical plants
f. Grain storage
g. Power generating facilities
h. Hazardous manufacturing processes
i. Paint, flammable liquid storage
j. High plies combustible storage

TABLE A102.3
FACTOR FOR EXPOSURE (Xi)

Factor for exposure (Xi): The factor for (Xi) depends upon the construction and length-height valve (length of wall in feet, times height in stories) of the exposed building and the distance between facing walls of the subject building and exposed building and shall be selected from table A102.3 below.

			Construction of facing Wall of Exposed Building Classes			
Construction of Facing Wall of Subject Building	Distance in Feet to the Exposed Building	Length-Height of Facing Wall of Exposed Building	3,5	1, 2, 4		
				Unprotected Openings	Semi-Protected Openings (wired glass or outside open sprinklers)	Blank Wall
Frame, Metal or Masonry with Openings	0-10	1-100	0.22	0.21	0.16	0
		101-200	0.23	0.22	0.17	0
		201-300	0.24	0.23	0.18	0
		301-400	0.25	0.24	0.19	0
		Over 400	0.25	0.25	0.20	0
	11-30	1-100	0.17	0.15	0.11	0
		101-200	0.18	0.16	0.12	0
		201-300	0.19	0.18	0.14	0
		301-400	0.20	0.19	0.15	0
		Over 400	0.20	0.19	0.15	0
	31-60	1-100	0.12	0.10	0.07	0
		101-200	0.13	0.11	0.08	0
		201-300	0.14	0.13	0.10	0
		301-400	0.15	0.14	0.11	0
		Over 400	0.15	0.15	0.12	0
	61-100	1-100	0.08	0.06	0.04	0
		101-200	0.08	0.07	0.05	0
		201-300	0.09	0.08	0.06	0
		301-400	0.10	0.09	0.07	0
		Over 400	0.10	0.10	0.08	0
Blank Masonry Wall	Facing wall of the exposed building is higher than subject building: Use the above table EXCEPT use only the length-height of facing wall of the exposed building ABOVE the height of the facing wall of the subject building. Buildings five stories or over in height, consider as five stories. When the height of the facing wall of the exposed building is the same or lower than the height of the facing wall of the subject building, Xi=0.					

TABLE A102.4
FACTOR FOR COMMUNICATIONS (Pi)

The factor for Pi depend upon the protection for communicating party-wall openings and the length and construction of communications between fire divisions and shall be selected from Table A102.4. When more than one communication type exists in any one side wall, apply only largest factor Pi for that side. When there is no communication on a side, Pi =0. (+ For over 50 feet, $P_i = 0$)

Description of protection off passageway opening	Fire Resistance, Non-Combustible or Slow-Burning Communications				Communications with Combustible Construction					
					Open			Enclosed		
	Any Length	10 ft. or Less	11 ft to 20 ft.	21 ft. to 50 ft. +	10 ft. or Less	11 ft to 20 ft	21 ft. to 50 ft. +	10 ft. or Less	11 ft. to 20 ft.	21 ft. to 50 ft.+
Unprotected	0	0.40	0.30	0.20	0.30	0.20	0.10	0.50	0.40	0.30
Single Class A Fire Door at One End of passageway	0	0.20	0.10	0	0.20	0.15	0	0.30	0.20	0.10
Single Class B Fire Door at One End of Passageway	0	0.30	0.20	0.10	0.25	0.20	0.10	0.35	0.25	0.15
Single class A fire door at each end or double class A fire doors at one end of passageway	0	0	0	0	0	0	0	0	0	0
Single class B fire door at each end or double class B fire doors at one end of passageway	0	0.10	0.05	0	0	0	0	0.15	0.10	0

Note: When a party wall has communicating openings protected by s single automatic or self-closing Class B fire door, it qualifies as a division wall for reduction of area. Where communications are protected by a recognized water curtain, the value of P_i is 0.

A102.10 - EXAMPLE FIRE FLOW ANALYSIS

A new cinema building will be constructed and has a footprint area of 77,680 square feet and a gross area of 134,320 square feet. The building is three stories, type 1B construction and is classified as use group A1 for theaters with the ground floor primarily movie theater seating. To the west of the proposed cinema is a hi-rise office building approximately 85 feet away. To the north and south there is on grade parking and no structure within 100 feet. To the east there is a future structure planned and it will be within 30 feet of the cinema. All vertical openings are unprotected or have less than one ½ hour fire rated protection. The facility will have full fire sprinkler protection based on the NFPA 13 standard.

Needed Fire Flow - NFFi = (Ci)(Oi)(X + P)i

(1) Ci = Construction Factor where Ci = 18 F $\sqrt{Ai}$

F = coefficient related to type of construction:

- F = 0.6 for fire-resistive construction (2003 VUSBC Types IA & IB)

A = effective building area - the total area of the largest floor plus 50% of the area not exceeding eight floors when all vertical openings are unprotected or have at least a 1 ½ hour fire rated protection for Construction type I and II

A = 77,680 + (134,320 - 77,680) x .50 = 106,000 square feet.

C = 18 x .6 x $\sqrt{}$ 106,000 - 3516 gpm

(2) Oi = Occupancy Factor, which reflects the combustibility of the occupancy.

- O = 1.15 for free burning based on a conservative design approach from undetermined plastic and fabric seating fixtures.

(3) (X + P)i = Exposure and Communication Factors from Tables A102.3 and A102.4. Values for X and P are determined from charts containing factors for type or separation or connections, separation distance.

(Xi + Pi) = 1.0 + (Xi+ Pi) = 1.0 + (0.10 = 0.0 + 0.19 + 0.0) = 0 = 1.29
west north east south

Needed Fire Flow = (C) x (O) x 1 + Xi + Pi) = 3,516 x 1.15 x 1.29 = 5250 gpm

Note: 50% reduction available since a full NFPA 13 sprinkler system will be installed. Therefore:

NFFi = 5250 x 0.50 = 2,625 gpm = 2,750 (rounding to the nearest 250 gpm increment)

SECTION A103 - SITE PLAN INFORMATION

A103.1 Site Plan Requirements. The following information shall be provided on site plans:

1. Submitter name, address, telephone number
2. Building name and address
3. Edition of the building code (*Virginia Uniform Statewide Building Code*), occupancy classification, use group and type of construction.
4. Height of building in feet and stories
5. Foot print area of building and gross floor area of building.
6. Identification of fire walls, fire barriers, other fire separations with hourly rating.
7. Existing and proposed water and fire main locations and sizes.
8. Existing and proposed fire hydrants locations size of pipe, and expected flow and pressure.
   Note: Fire Hydrant Coverage and Location.
   (a) Minimum 40-foot clearance from hydrant to any structure.
   (b) Maximum 100 feet from hydrant to fire department connection.
   (c) Fire hydrant coverage: 300 feet, measured from the hydrant to the most remote point of vehicular access on the site, via the vehicular travel path.
   (d) Dead-end water main to fire hydrant distance:
   6" line 380 feet max. distance
   8" line 1,550 feet max. distance
   10" line 4,600 feet max. distance
   12" line 11,150 feet max. distance
   (e) No obstructions within 4 feet of hydrant (plants, fences, retaining walls, etc.)
   (f) Fire hydrants and water mains in or on parking structures shall be protected from freezing, but no heat tape permitted.
   (g) Fire hydrant location for single-family dwellings: lot line and/or curve of pavement
9. State if a full or partial fire sprinkler system will be installed.
10. If fire sprinkler system will be installed, show location of fire department siamese connections(s).
    Note: Siamese shall be located on street front, address side of building but provide additional siamese for buildings five stories or 50 feet or greater, on the other side of the building. Siamese connection shall be visible and accessible with no obstructions within 4 feet.
11. Topographical map relating grade and elevation to fire department connections.
12. Available water pressure and flow capacity, static pressure, residual pressure, flow in gpm.
13. Calculate required fire flow and indicate available fire flow at 20 psi per Insurance Services Office (ISO) methodology as described in this document.
14. Location of all Emergency Vehicle Easements (EVE) and locations of EVE signs.
15. Adequate emergency vehicle access, turning radii.
    Note: (a) Buildings more than 5 stories or 50 feet in height require ladder truck access on the two longest opposing sides with 100% of those respective sides accessible to the fire department.
    (b) Dead-end emergency vehicle easements greater than 100 feet require turnaround.
    (c) Emergency vehicle access to within 100 feet of main entrance.
    (d) Swimming pool access - to be within 50 feet of edge of pool.
    (e) Show all overhangs and obstructions to emergency vehicle easement. The minimum emergency vehicle clearance for canopies, overhangs, and obstructions is 15 feet.
    (f) Design live load for emergency vehicle on parking structure, deck shall conform at a minimum to A.A.H.S.T.O. Loading Standard HS-20.
16. Check VUSBC Table 503 for area and height requirements

SECTION A104 - FIRE HYDRANTS

A104.1 Fire Hydrant Requirements. Hydrants shall be Mueller "Centurion" (Catalog #A-423) provided with a 6-inch connection to the water main. The hydrant shall have on 1- ½ inch pentagon-operating nut, left turn to open, two 2- ½ inch NSH nipple outlets capped, and one 4-inch NSH nipple outlet capped. The hydrant shall be connected to a Mueller Gate Valve (Catalog #A2360-2 or Virginia American Water Company approved equivalent) by the 6 inch water supply line and have a minimum 5 1/4 inch valve opening with 6 inch mechanical joints as shown in Figure A104.1 - *Fire Hydrant Installation Specifications*. Additional requirements are as follows:

1. The hydrant shall be supported by hard, compacted block with hard gravel bedding.
2. Fire hydrant branch connections placed in fill material shall be installed using restrained joint pipe or tie rods as approved by Virginia-American Water Company.
3. The hydrant shall be located so that the thrust block is placed in undisturbed soil. Where this is not practical, the soil beneath the surrounding thrust block shall be compacted to 95% of maximum density in accordance with VDOT Sections 523.03, 302, 303.10 and 200.02.
4. The hydrant shall be plumb and the center of the hydrant (4-inch nozzle cover) shall be a minimum of 18 inches and maximum of 24 inches from the top face of the curb.
5. Excavation shall contain one ton of coarse washed gravel around base of hydrant for drainage.
6. The bottom of the safety flange shall be 2 ½ inches above the edge of the shoulder on streets without curb and gutter and 2 ½ inches above the elevation of curb on streets with curb and gutter.
7. Bends in underground piping shall be rodded and blocked.
8. Laterals shall be equipped with shut-off valves at tees or tapping sleeves. Valves shall be secured by rods or bolts, to tees or mains. Valves shall be equipped with standard two-inch square operating nuts and valve boxes with covers. Valves shall have right hand closure.
9. All hydrant branches shall have a minimum cover of four feet at the ditch line.
10. Public hydrants shall be painted with rust inhibitive primer and exterior enamel in the following color(s): Sherwin Williams "Safety Yellow" #B54Y37 for barrels and Sherwin Williams "Pure White" #B54W101 for hydrant bonnets and caps. **Exception:** Public hydrant barrels may be painted with an approved flat black paint where such locations are specifically approved in writing by the Fire Chief. Private hydrant shall be painted with a rust inhibitive primer and exterior enamel Sherwin Williams "Safety Yellow" #B54Y37 for the barrels and bonnets and Sherwin Williams "Pure White" #B54W101 for the caps only. **Exception:** Private hydrant barrels may be painted with an approved flat black where such locations are specifically approved in writing by the Fire Chief.
11. Code Enforcement Bureau personnel shall witness all flushing, perform visual inspection, hydrostatic and flow testing of all public and private hydrants by a licensed contractor. Code Enforcement personnel shall confirm the hydrant meets the 100% design flow requirement. If the contractor brings the hydrant into compliance with the 100% design flow requirement.
12. Sidewalks shall be wrapped around hydrants located in areas where the grass area is shown as two feet or less.
13. Easements shall be required for hydrants located in ditch section streets where there is less that five feet clearance from hydrant to the property line.
14. Hydrants shall be installed, either five feet from the point of curvature of curb returns or on the property line in subdivisions.
15. Fire hydrants shall be located at least 40 feet from all buildings served by the hydrant. When a hydrant cannot be placed at the required distance, the Director of Code Enforcement will consider exceptions to the requirement if the conditions are within the parameters listed in the currently adopted edition of NFPA 24, *Installation of Private Fire Service Mains and their Appurtenances*.
16. No plantings or other obstructions shall be located within four feet of any hydrant or fire department siamese connection.
17. Four-inch steel pipe bollards shall be installed in accordance with the requirements of Figure A104.2 *Fire Hydrant Protection Pipe Bollard Installation* detail around hydrants as needed for industrial and

commercial developments where curbs are not available and in locations where the potential for damage is greater than normal due to vehicular traffic as determined by the Director of Code Enforcement. Bollards shall be located adjacent to the hydrant and in such a manner as not to interfere with the ability to connect hoses or operate the hydrant. Where possible, bollards shall be at least 30 inches from the center of the hydrant-operating nut in all directions. The bottom of the bollards and encasement shall not be located above the hydrant supply piping and valve or within the area of the hydrant supply piping to prevent the possibility of damage to the underground piping should the bollard be displaced by vehicular contact. Exact locations of bollards will be determined by the engineer of record and approved by the Director of Code Enforcement.

18. Where standpipes or sprinkler systems are provided within buildings, a fire hydrant shall be located within 100 feet of the fire department siamese connection. Where possible and practical, the fire hydrant shall be located on the same side of the street as the fire department siamese connection if the hydrant does not violate the minimum distance from all buildings requirement in Item 17.
19. All fire hydrants shall be located so the maximum distance measured from the hydrant to the most remote point of vehicular access on the site is 300 feet.

FIGURE A104.1 FIRE HYDRANT INSTALLATION SPECIFICATIONS

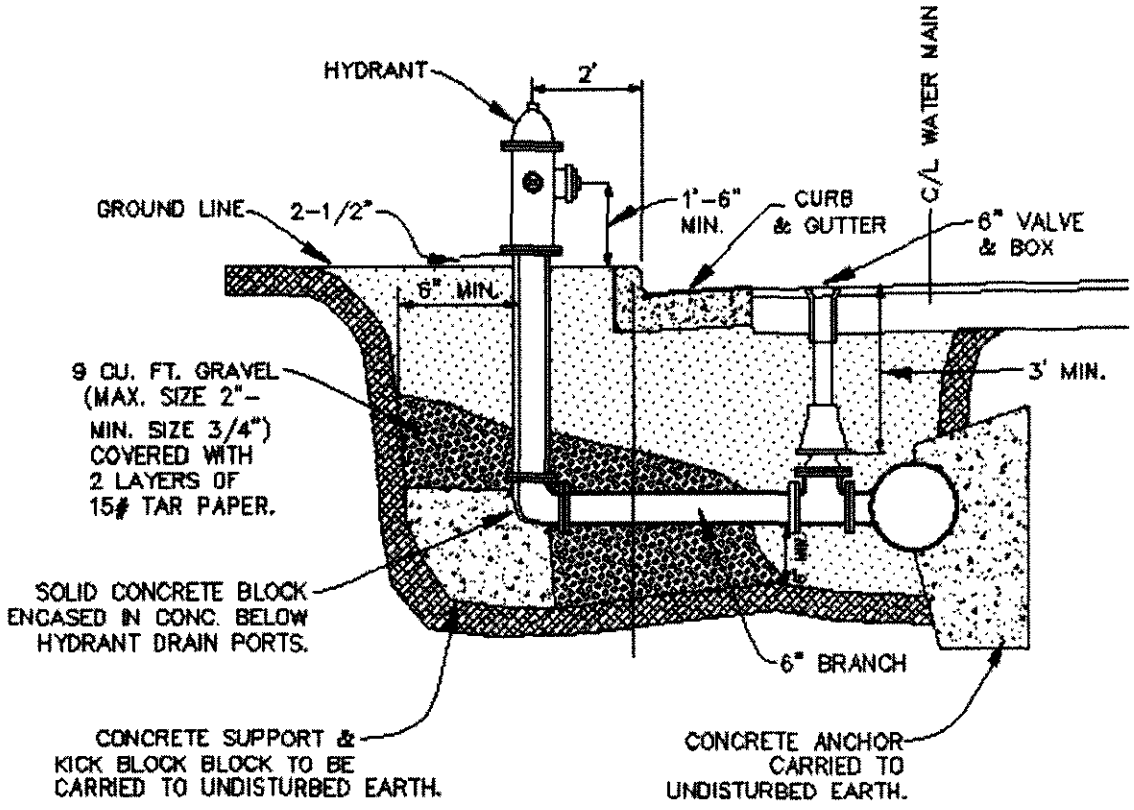

NOTES

1. FIRE HYDRANT: MUELLER CENTURION – CATALOG " A423 WITH 1-1/2 INCH PENTAGON OPERATING NUT; LEFT TURN TO OPEN TWO 2-1/2" HOSE NOZZLES AND ONE 4" HOSE NOZZLE.

2. VALVE: MUELLER GATE VALVE – CATALOG # A2380-20, WITH 6 INCH MECHANICAL JOINTS. 2 INCH SQUARE NUT, LEFT TURN TO OPEN.

FIGURE A104.2 FIRE HYDRANT PROTECTION
PIPE BOLLARD DETAIL

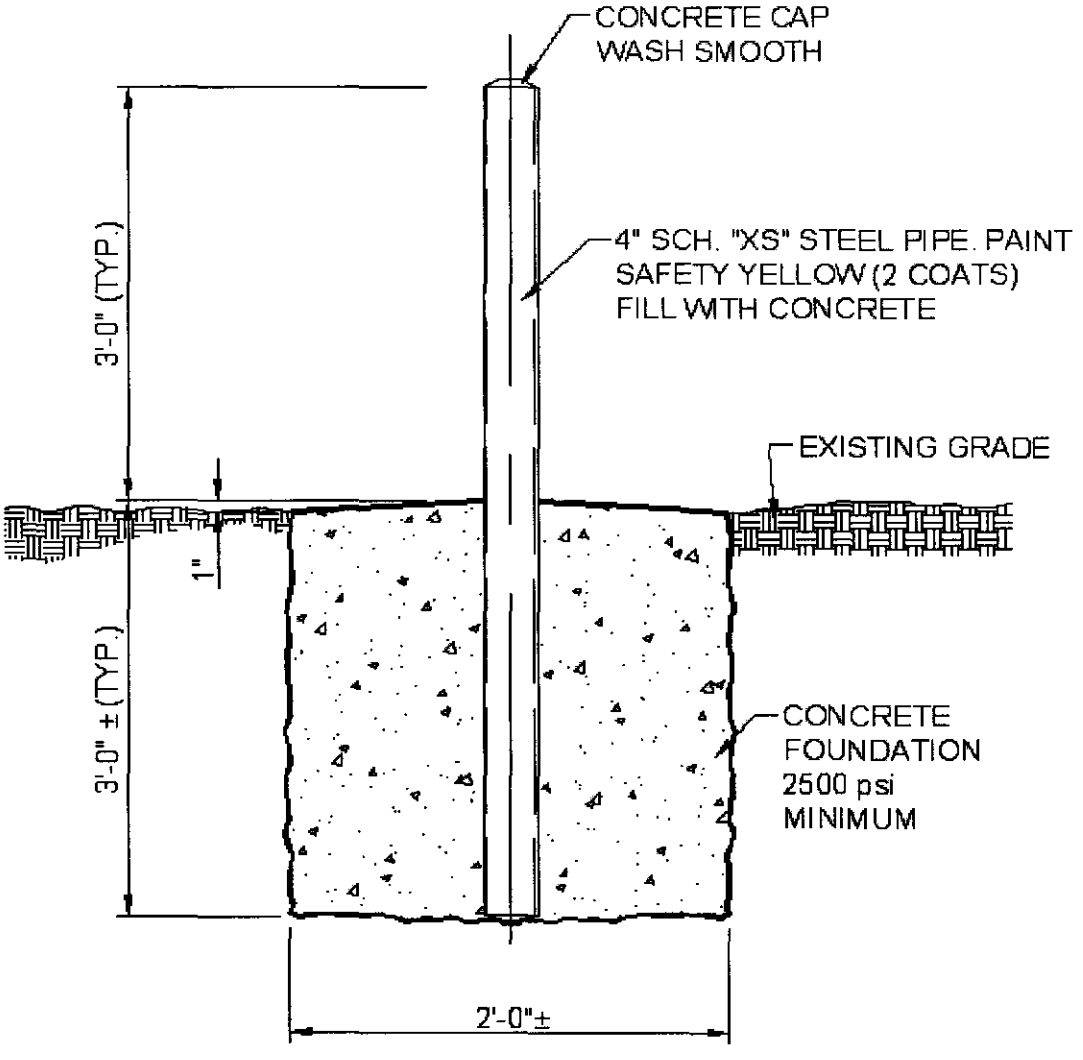

SECTION A105 - INSTALLATION AND TESTING OF UNDERGROUND FIRE MAINS AND FIRE LINES

A105.1 Fire Main and Fire Lines Requirements. All installation and testing shall be in accordance with the currently referenced edition of NFPA 24, *Private Fire Service Mains and Their Appurtenances*, as referenced by the *Virginia Uniform Statewide Building Code*. A Contractors Material and Test Certificate for Underground Piping, (see NFPA 24 appendix) shall be completed and signed by the installing contractors. A Code Enforcement Bureau inspector shall witness all required inspections and tests.

A105.2 General Requirements. The following general requirements shall be followed when installing fire main and fire lines:

1. Fire lines shall have at least four (4) feet of ground cover from the top of the pipe.
2. All bends and tees shall be provided with thrust blocks in accordance with NFPA 24.
3. All rods shall be a minimum of 5/8 inch in diameter. The number of rods shall be determined by the pipe size.
4. All rods , nuts, bolts, washers, clamps and other restraining devices shall be cleaned and thoroughly coated with bituminous or other acceptable corrosion-retarding material.
5. Thrust blocks shall be placed against undisturbed soil. Pipe clamps and tie-rods, thrust blocks, locked mechanical or push-on joints, mechanical joints utilizing set screw retainer glands, or other approved methods or devices shall be used. The type of pipe, soil conditions and available space shall determine the method.
6. When using clamps, rods shall be used in pairs, two to each clamp.
7. Fire lines shall not run under buildings.
8. All pipe shall be hydrostatically tested and visually inspected before being covered. The trench shall be backfilled between joints before testing to prevent movement of pipe.
9. The hydrostatic test of 200 psi or 50 psi over static pressure, whichever is higher shall be conducted for two (2) hours.
10. The contractor shall remain responsible for locating and correcting any leakage. If pipe is covered, no drop in pressure during the hydrostatic test is permitted.
11. Gauges used in performing acceptance tests shall meet the following:
    (a) Gauges shall be appropriate for the type of test (i.e., air gauge for air pressure test, water gauge for hydrostatic test.
    (b) Air gauges shall have increments of two (2) pounds or less. Water gauges shall have increments of ten (10) pounds or less.
    (c) The gauge shall be capable of registering pressures above the minimum pressure required during the test. The pressure registered during the actual test shall be at least the minimum required for the test and less than the maximum of the gauge register. Gauges shall be marked as accepted by UL or FM testing laboratories. No valves shall be installed in a fire line between the street valve at the water main and the OS&Y valve inside the building.
12. All fire lines shall be thoroughly flushed with an opening the same size as the pipe.
    The minimum rate of flow shall be not less than the water demand rate of the system, which is determined by the system design, or not less than that necessary to provide a velocity of 10 feet per second, whichever is greater. The flushing operation shall continue for sufficient time to ensure thorough cleaning.

TABLE A105.1 - FLOW RATES

Pipe Size (inches)	Flow Rate (gpm)
4	390
6	880
8	1560
10	2440
12	3520

13. When the above flow rate cannot be verified or met, supply piping shall be flushed at the maximum flow rate available to the system under fire conditions.
14. Approved site plans showing the size and location of pipe shall be on the job site before the inspection or test is performed.
15. Galvanized spool piece (potable water). The procedure for installing a galvanized pipe between the ductile iron fire line and the OS&Y valve is as follows:
    (a) If a spool piece is used between the fire line stub and the OS&Y valve to raise the valve off the fire line stub, then it shall be galvanized pipe. This spool may be hydrostatically tested as part of the underground, or part of the sprinkler riser.

- or -

    (b) If the OS&Y valve is rated by the AWWA as suitable for connection to a potable water system, this valve is a suitable transition piece between the fire line stub and the check valve. This OS&Y valve may be attached directly to the fire line stub if there is adequate clearance for proper operation of the valve, and then no galvanized pipe is required.

16. All items shall be inspected before any backfill.
17. Electrical ground wires shall not be connected to underground fire lines.
18. Backfill shall be well tamped, free of rocks and construction debris and free of corrosives.

SECTION A106 - EMERGENCY VEHICLE ACCESS

A106.1 Requirements. The following requirements shall be followed when designing emergency vehicle access:

1. Access for emergency vehicles shall be provided to within 100 feet of the main or principal entrance to every building. The access shall be provided by a public or private street parking lot.
2. When new buildings are more than five stories or 50 feet in height, ladder truck access shall be provided on the two longest opposing sides with 100% of those respective sides accessible to the fire department.
3. The access to the rear my be provided by either a street, parking lot or emergency vehicle easement designed to all appropriate standards.
4. The inner surface of the ladder truck access way shall be no less than 15 feet and no more than 30 feet from the exterior building wall.
5. Where required, emergency vehicle easements shall have a minimum width of 22 feet.
6. Required fire department access ways over 100 feet in length shall have provisions for turning apparatus around according to the requirements referenced in Figure A106.1 for emergency vehicle easements in this document.
7. A 12-foot wide access lane to within 50 feet of the edge of the swimming pools, with an eight-foot wide personnel gate in the fence at the point of access is required except for individually owned pools located on single-family lots.
8. Building overhangs which cross an emergency vehicle easement threshold shall not be occupied space and shall be no less than 15 feet in height, as measured from the top surface of the roadway to the lowest protrusion of the overhang.
9. Residential rear service alleys that function as fire department emergency vehicle access shall meet

the access criteria as described in Item 2 of this section and Figure A106.2.

10. Design live load for emergency vehicle on parking structure, deck shall conform at a minimum to A.A.H.S.T.O. Loading Standard HS-20.
11. Alternatives to Emergency Vehicle Access will be considered on a case-by-case basis and examined and approved through the Code Modification process in accordance with Section 106.3 of the *Virginia Uniform Statewide Building Code*, 2003 edition. Features that will be considered include, but are not limited to occupancy, combustibility, construction enhancements and passive and active fire protection enhancements over the base-line requirements for the structure. Refer to Alexandria Fire and EMS Department document *Exterior Fire Department Operations and Supplemental Fire Protection and Rescue Features in Mid-Rise and High-Rise Structures* for alternative design approaches.

SECTION A107 - EMERGENCY VEHICLE EASEMENTS

A107.1 Emergency Vehicle Easements. Emergency vehicle easements shall be a minimum of 22 feet across the travel lane. The emergency vehicle easement shall provide access to strategic areas of the building and fire protection systems as designed by the Director of Code Enforcement. Curbing and street components shall conform to the standards established by Transportation and Environmental Services for emergency vehicle easements.

A107.2 Sign Specifications. Emergency vehicle easement signs shall be metal construction, 12-inches wide and 18 inches in height. Provide red letters on reflective white background with a 3/8-inch red trim strip around the entire outer edge of the sign. The lettering shall say "NO PARKING," "EMERGENCY VEHICLE EASEMENT," "EM. VEH. EAS," and "City of Alex.," and be placed as shown in Figure A107.1, A107.2 and A107.3. Lettering size shall be as follows: "NO PARKING" - 2 inches, "EMERGENCY VEHICLE EASEMENT" - 2 ½ inches. EM. VEH. EAS. - 1 inch, CITY OF ALEX. - ½ inch. Directional Arrows - 1 inch by 6 inches solid shaft with solid head - 1 ½ inches wide and 2 inches deep (See Figures A107.1, A107.2, A107.3 for examples). Signs shall be mounted with the bottom of the sign 7 feet above the roadway, and shall be properly attached to a signpost or other approved structure such as designated by the Director of Code Enforcement. Posts for signs, when required, shall be metal and securely mounted. Signs shall be parallel to the direction of vehicle travel and posted so the directional arrows clearly show the boundaries and limits of the Emergency Vehicle Easement. In areas where emergency vehicle easements involve two-way traffic, double mounted signs shall be provided. The maximum distance between signs shall be 100 feet. Other special signs or modifications to emergency vehicle easement signs shall be approved by the Director of Code Enforcement.

A107.3 Fire Dept. Access Lanes/Mountable Curbs. Where curbing is a component of the emergency vehicle easement, the curbing construction shall conform to weight and grade requirements for vehicular traffic. In no circumstances shall a raised curb be located in the path of travel in a emergency vehicle easement. Where a mountable curb is provided as part of an emergency vehicle easement, emergency vehicle easement signs shall be posted at the point nearest the edge of the emergency vehicle easement, but in no case within the clear width of the emergency vehicle easement.

SECTION A108 - CONVEYANCE OF EMERGENCY VEHICLE EASEMENT TO CITY OF ALEXANDRIA

A108.1 General. The property owner shall have an Engineer or Surveyor submit to the Transportation & Environmental Services Department a preliminary plat indicating location, width, boundary and a description of the composition of easement for the Emergency Vehicle Easement.

A108.2 Agency Review. The Transportation & Environmental Services Department and the director of Code Enforcement shall review the plat to determine whether the Emergency Vehicle Easement is necessary

or desirable and has adequate access, width, and turning radius. Transportation & Environmental Services Department will determine if the existing paved surface meets city standard (CSAP-1A). All elevated surfaces shall meet H-20 specifications. If the Emergency Vehicle Easement is attached to the terms and conditions of a Special Use Permit, then the applicant must also file with the City's Planning & Zoning Office for review. All appropriate agencies will comment on the content of the plat.

A108.3 Approval. If approved, the applicant will submit a final plat and descriptive deed. The City of Alexandria will sign and return to applicant for recordation.

A108.4 Recordation. Upon recordation, the applicant will report deed book and page number (instrument number) to Transportation & Environmental Services Dept. to be kept on file. The final plat and bond will not be released until the deed has been recorded.

FIGURE A106.1 MINIMUM STANDARDS FOR EMERGENCY VEHICLE ACCESS TO PRIVATE STREETS AND ALLEYS

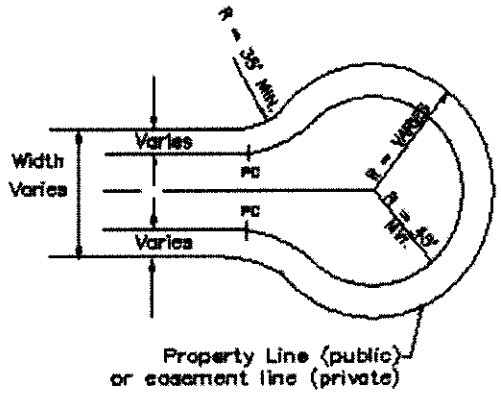

CUL-DE-SAC
PRIVATE STREET TURNAROUND

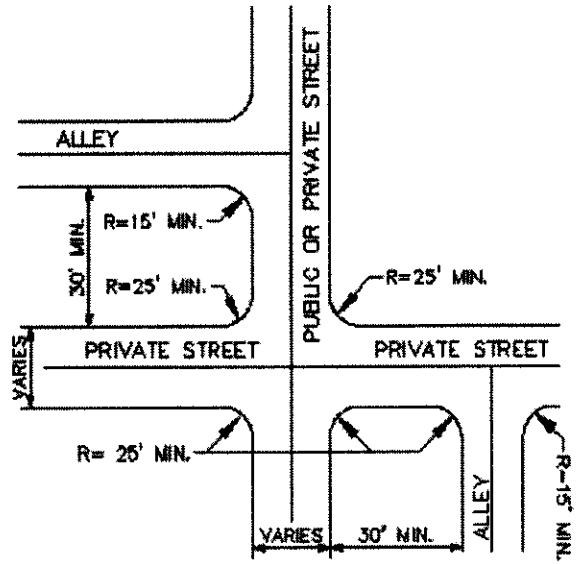

INTERSECTION LAYOUT

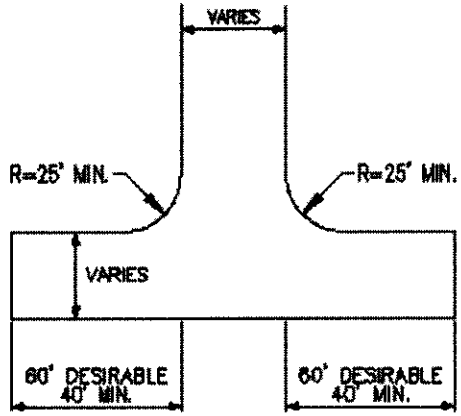

HAMMERHEAD
PRIVATE STREET TURNAROUND

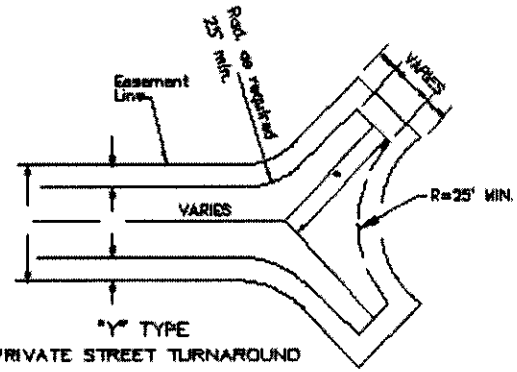

"Y" TYPE
PRIVATE STREET TURNAROUND
* DIMENSION VARIES TO FIT INDIVIDUAL PLAN – 60 FOOT MINIMUM

GENERAL NOTES:

1. ALL TRAVEL WAYS TO CARRY EMERGENCY VEHICLES OR PUBLIC TRASH SERVICE MUST BE BUILT TO MINIMUM STREET STANDARDS CSPRS-1 THROUGH CSPRS-6 AND HAVE TURN -A- ROUNDS
2. ALL EMERGENCY VEHICLE EASEMENTS MUST CONFORM TO CSAP-1A OR BETTER.

FIGURE A106.2
RESIDENTIAL REAR SERVICE ALLEY STANDARDS

(MUST BE USED ON ALL NEW RESIDENTIAL DEVELOPMENT PROJECTS WHERE VEHICULAR ACCESS IS FROM THE REAR)

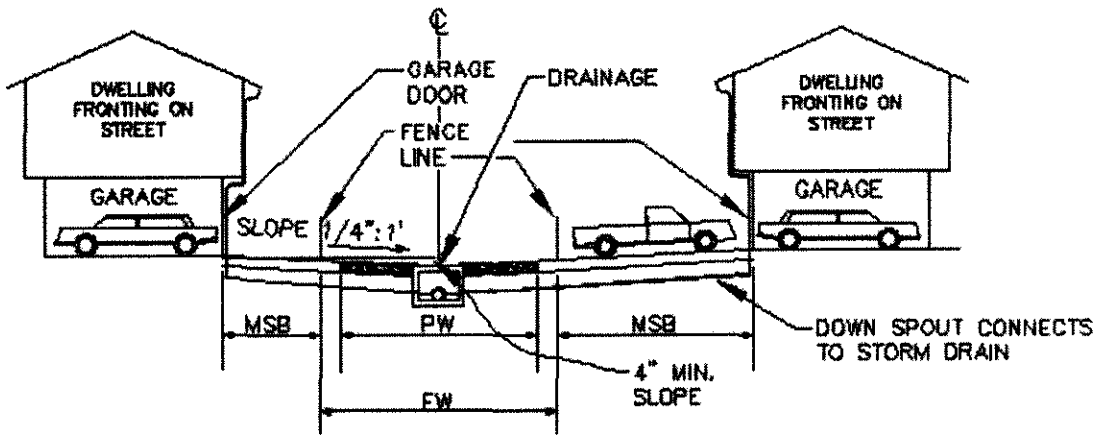

CSRR SA–2
ALL REQUIRED PARKING IN GARAGE (NO PARKING IN ALLEY)

CSRR SA–1
REQUIRED PARKING IN DRIVEWAY AND GARAGE (NO PARKING IN ALLEY)

RESIDENTIAL REAR SERVICE ALLEY STANDARD	MINIMUM WIDTHS					
	TWO – WAY TRAFFIC FLOW			ONE – WAY TRAFFIC FLOW		
	PW	EW	MSB	PW	EW	MSB
CSRR SA–1	22'	24'	20'	18'	20'	20'
CSRR SA–2	22'	24'	10'	18'	20'	10'

NOTES:
1. MINIMUM RADII WHERE ALLEYS MEET STREETS OR OTHER ALLEYS = 15'.
2. ALLEY GUTTER MAY BE ADJUSTED OFF CENTER TO MATCH TERRAIN.
3. (MSB) = MINIMUM SET BACK.
4. (EW) = EASEMENT WIDTH.
5. (PW) = PAVEMENT WIDTH.

FIGURE A107.1 FIRE LANE SIGN

FIGURE A107.2 FIRE LANE SIGN

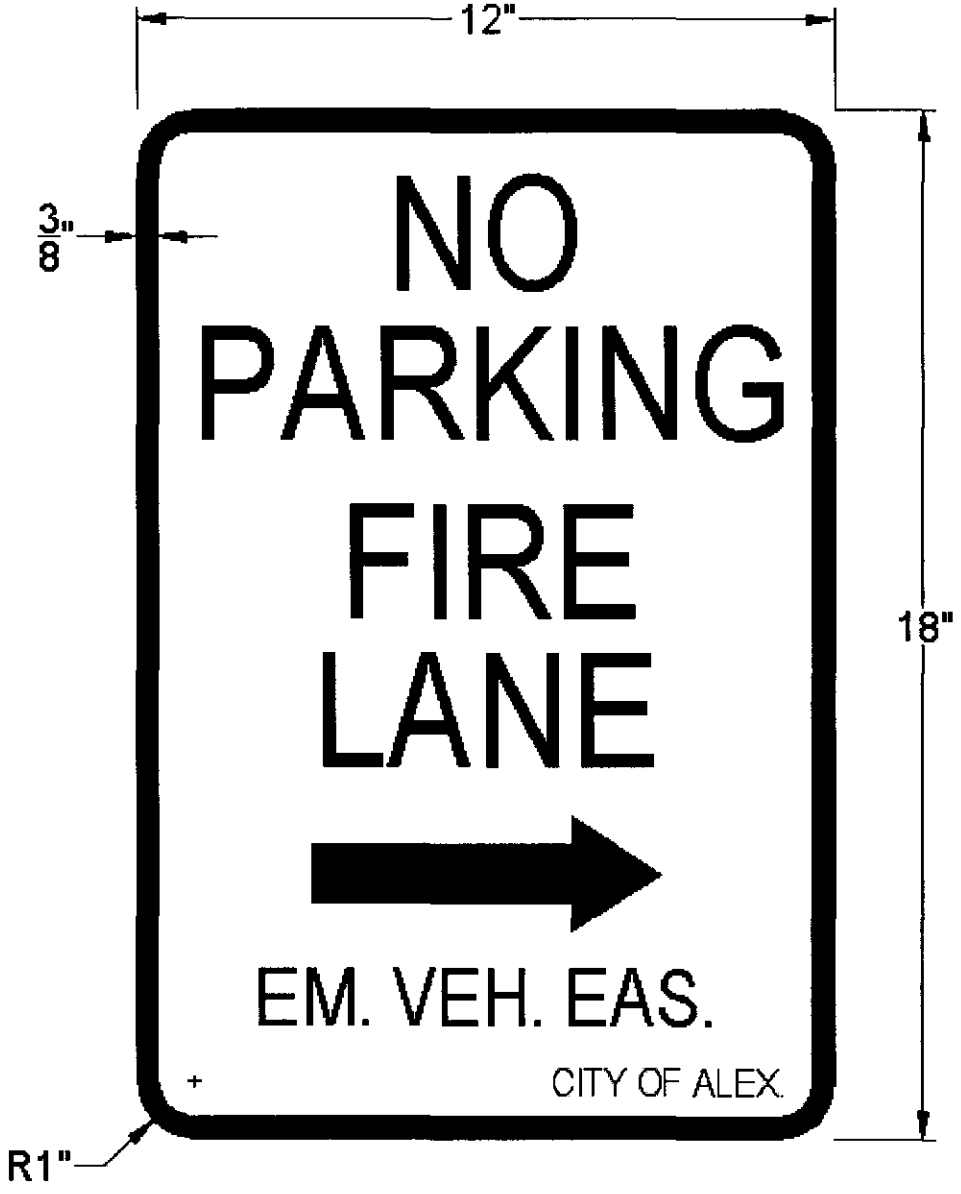

FIGURE A107.3 FIRE LANE SIGN

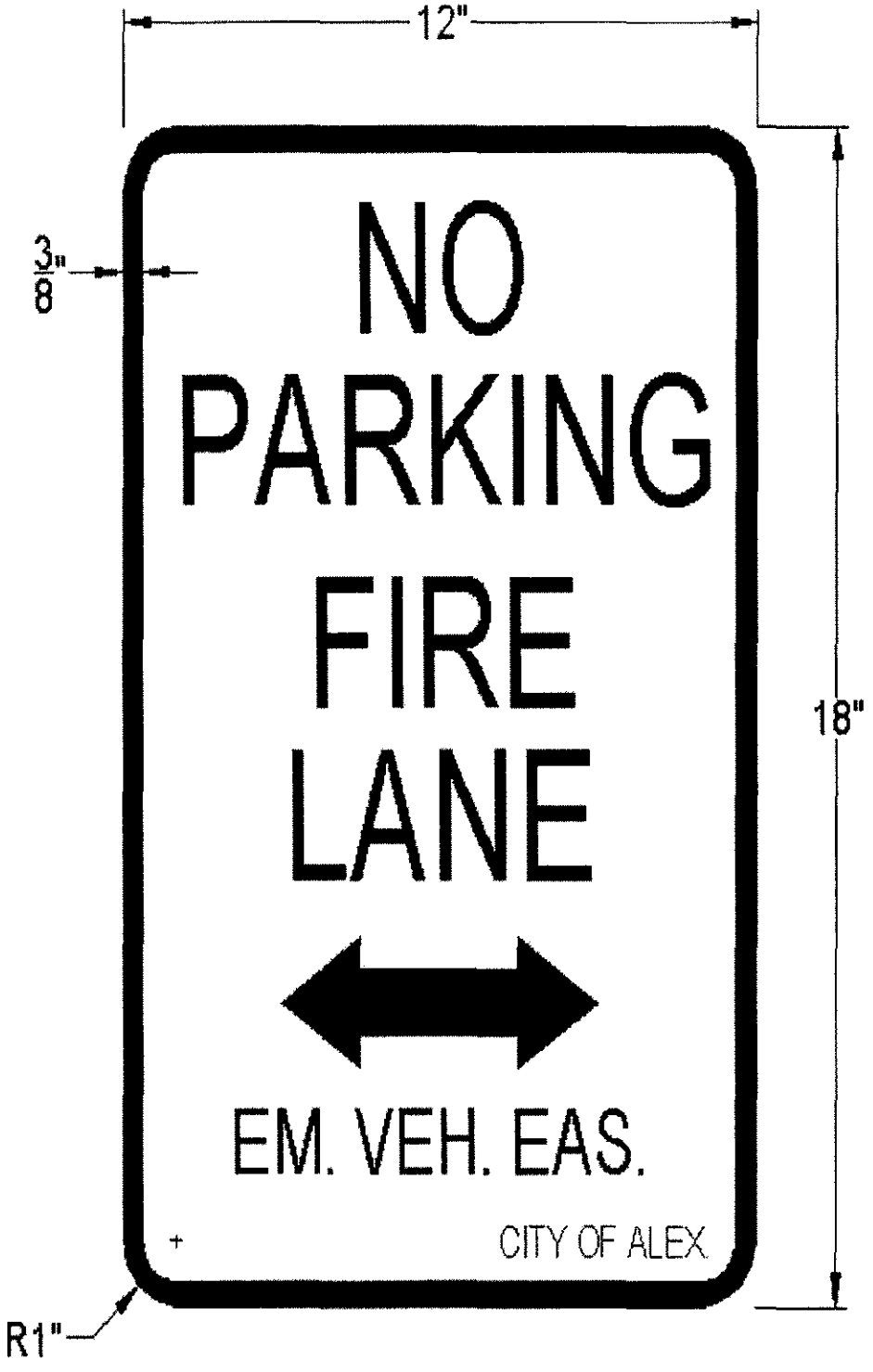

APPENDIX B - REQUIREMENTS FOR A FIRE WATCH

SECTION B101 GENERAL

B101.1 Scope. When a fire sprinkler, alarm, detection or suppression system becomes impaired or is unable to provide the proper protection for which it was designed, it becomes necessary to find an alternate means to monitor the conditions in buildings relative to life safety and property protection. For short term and on a temporary basis, a fire watch is a system of activities designed to provide onsite observation, documentation and notification in the event of a fire emergency.

SECTION B102 REQUIREMENTS

B102.1 Procedures. When the establishment of a fire watch is ordered by the Fire Department or Code Enforcement Bureau, the owner or the owner's representative shall implement the following procedures and requirements for the duration of the fire watch. The fire watch shall be maintained until such time the noted system(s) is returned to normal ready service and approved for use by the Code Enforcement Bureau.

B102.2 Requirements. A fire watch shall consist of the following:

Designated number of staff (minimum of two personnel) at all times and until the compromised system has been repaired, inspected, tested and certified to be placed back in service by the Code Enforcement Bureau. Each participating staff member shall be equipped with reliable two-way communications. One staff member shall always be stationed in an area or room equipped with a working telephone or cellular phone to report an alarm by dialing 9-1-1.

NOTE: When dialing 911 from a cellular phone, some cellular phone systems may connect user with another jurisdiction's emergency communications center, therefore the caller should confirm they are speaking with the "Alexandria Fire and EMS Dept. Emergency Communications Center".

Walking tour of all areas of the building no less than every 15 minutes to observe for conditions where fire, smoke or hazardous situations require fire department response,
- or-
A complete tour of the facility within a time frame prescribed by a representative of the Code Enforcement Bureau of Fire Department and with the staffing level contingent upon the size of the facility and the type of occupancy.

NOTE: If the building or property is of such size that two individuals cannot adequately perform the required fire watch, the Fire Department representative may require additional on site personnel. The Fire Department representative may require additional on site personnel. The Fire Department representative may permit one person to perform the fire watch if the building or property is size that one person can adequately perform the fire watch.

A legibly written log shall be kept on site at all times for review by any Fire Department employee documenting:

(a) Reason the fire watch was implemented
(b) Date and time the Fire Department was notified the fire watch was initiated and concluded.
(c) Start and stop time of each building or property tour.
(d) Key locations visited in the building(s) requiring the fire watch.
(e) Name(s) of personnel conducting the fire watch.
(f) Name(s) of personnel recording the information.

Personnel conducting the fire watch shall be:

(a) Capable of performing patrol duties
(b) Reliable
(c) Not addicted to the use of or under the influence of intoxicants, narcotics, illegal drugs, and/or physically or mentally impaired by prescription drugs.
(d) Able to clearly and accurately converse with Fire Department personnel in English, in the event of any emergency.
(e) Able to remain awake and alert at all times.

NOTE: In all cases, the sole duty of personnel assigned to the fire watch shall be to perform constant patrols of the protected premises, to keep watch for fires, and if necessary to summon the fire department.

If a fire is located:

(a) The fire watch staff shall immediately call 9-1-1 and report the location of the fire within the building.
(b) Begin the evacuation of the building starting on the fire floor, then above the fire floor, then below the fire floor.
(c) Do not attempt to extinguish the fire.

(4) Appendix C, Requirements for Fireworks Displays is amended by adding the following:

APPENDIX C - REQUIREMENTS FOR FIREWORKS DISPLAYS

SECTION C101 GENERAL

C101.1 Scope. This appendix provides the permit and display requirements for the use of fireworks within the City of Alexandria. The City of Alexandria shall issue permits, upon application in writing, for the display of aerial fireworks, commonly known as pyrotechnic displays, for fair associations, amusement parks, or by any organization or group of individuals; provided such display is in general accord with the applicable sections of National Fire Protection Association (NFPA) 1123, *Fireworks Displays,* a referenced standard, listed in Chapter 45, of the Virginia Statewide Fire Prevention Code.

SECTION C102 REQUIREMENTS

C102.1 Insurance Requirements. The Code Enforcement Bureau shall issue no permit until all requirements of this appendix are submitted for review, approved, and the applicant files a certificate of insurance with the City of Alexandria named as a co-insured on all policies in the amount of two million ($2,000,000) dollars for each bodily injury and property damage. The insurance policy shall become available for the payment of any damage arising from acts or omissions of the applicant, his agents or his employees in connection with the display of aerial fireworks. The applicant shall ensure the insurance policy is in effect at the time of the commencement of activities authorized by the permit and remains continuously in effect until such are completed.

C102.2 Requirements for Permit Application. An application for the display of aerial fireworks shall be completed and submitted to the Code Enforcement Bureau 45 days before the scheduled event. The application for aerial fireworks display shall include the following:

(a) A copy of insurance policy with the City of Alexandria named as a co-insured.
(b) A site plan with the layout of the discharge site, spectator site, viewing area, parking area, fallout area and distances for each; distances to all tents, buildings and structures.
(c) Provide a complete list of aerial fireworks to be displayed.
(d) Provide type and amount of fire protection.
(e) The type of physical barrier that will be installed around display site and number of monitors that will be used during performance.

(f) Identify the type of security and number of monitors that will be onsite during the display.
(g) Provide the shooter / operator's name, address, social security number, and date of birth.
(h) Provide fireworks display company address and emergency contact numbers.
(i) Provide emergency contact information including the owner of the property name and number, third shooter / operator (within one hour of travel), and hazardous material transport company responsible for transportation and security.
(j) Method of storage and location that display fireworks are to be stored.

C102.3 Firework Display Requirements. The following requirements of the Virginia Statewide Fire Prevention Code and National Fire Protection Association (NFPA) 1123, *Fireworks Displays*, briefly stated, are applicable to all fireworks displays, which require a permit from the local authority having jurisdiction.

he area selected for the discharge of aerial shells shall be located so that the trajectory of the shells will not come within 25 feet of any overhead object.

Display area shall incorporate a 70 feet diameter radius, per inch of largest fireworks display shell.

Ground Displays shall be located a minimum distance of 75 feet from spectator viewing areas and parking areas. Spinning Wheels, Roman Candles, and Large Salutes shall be located 125 feet form viewing areas.

Fire works shall not be discharged within 100 feet of any tent or canvas shelter.

The point of firing of aerial fireworks is to be at least 200 feet from the nearest permanent building, public highway, or railroad, and be at least 50 feet from the nearest aboveground telephone or telegraph line or other overhead obstruction. In no case shall a display be fired within 500 feet of a school, theater, church, hospital or similar institution.

The potential landing area shall be a large, clear, open area acceptable to the authority having jurisdiction.

Spectators, vehicles, or any readily combustible materials shall not be located within the potential landing area during the display.

Spectators shall be restrained behind lines at least 200 feet from the firing point by physical barriers and monitors. Only persons in active charge of the display shall be allowed inside these lines.

Projectile type fireworks shall fire into the air as nearly as possible in a vertical direction except fireworks fired beside a lake or other large body of water, the fireworks may be directed in such a manner that the firing residue of deflagrations will fall into the said body of water.

Unfired fireworks shall be covered or protected during firing and those remaining after display shall be immediately disposed of in a way safe for the particular type of firework.

If at any time, high winds in excess of 15 miles per hour, unusually wet weather prevails, or any other condition that represents an unsafe condition in the opinion of the authority having jurisdiction or the display operator, the public display shall be postponed until weather or other unsafe conditions improve to an acceptable level.

Extremely dry conditions shall require the display and fallout areas to be soaked with water before event commencing. If the outdoor burning restrictions are in place, outdoor firework displays shall not occur.

Portable water fire extinguishers or other adequate fire protection will be required at discharge site.

Display operators and assistants shall use only flashlights or electric lighting for artificial illumination.

Neither smoking nor open flames shall be allowed in the display or shell storage area as long as shells are present. Signs to this effect shall be conspicuously posted.

In the event of a shell failing to ignite in the mortar, the mortar shall be left alone for a minimum of 15 minutes then, carefully flood with water. Immediately following the display, the mortar shall be emptied into a bucket of water. The supplier shall be contacted as soon as possible for disposal instructions.

The entire firing range shall be inspected immediately following the display to locate any defective shells. The inspection shall be completed before the public having access. Any shells found shall be immediately doused with water before handling. The shells shall then be placed in a bucket of water. The supplier shall then be contacted as soon as possible for proper disposal instructions.

All operators shall be at least 21 years of age. Assistants shall be 18 years of age. An adequate number operators, assistants, and monitors shall be on hand to conduct the display. At no time shall there be less than two operators on duty.

No person shall handle or be involved in the firing of fireworks while under the influence of alcohol, narcotics, or drugs, which could adversely affect judgment, movement, or stability.

A method of communication (preferably a cellular phone) shall be on or near the display site in the event of an emergency. The Alexandria Fire and EMS Communication Center (phone number 911) shall be immediately notified in the event of fire and/or injury.

Fireworks Displays shall be completely set-up and ready for inspection at least 2 hours before event.

Personnel from the Code Enforcement Bureau Fire Marshals Office are required to inspect the display area before the event commencing, monitor the event and conduct a post event inspection.

Obtain and maintain original Fire Prevention Code Permit for Aerial Fireworks Display on the event site.

If the storage of fireworks is approved in the City of Alexandria, the operator shall maintain the original Fire Prevention Code Permit for aerial fireworks on the event site and comply with all Bureau of Alcohol, Tobacco, and Firearms storage requirements.

APPENDIX D - REQUIREMENTS FOR STAIRWAY IDENTIFICATION

SECTION D101 GENERAL

D101.1 Scope. Stairway identification prevents firefighters and citizens from becoming disoriented during a fire when smoke obscures vision. The requirement shall apply to all buildings above three stories in height.

D101.2 Purpose. Stairway identification ensures all stairwell landings are marked in a prescribed manner to help determine the location of the person within the building.

D102 REQUIREMENTS

D102.1 Requirements. The requirements outlined shall be followed to identify and properly mark each stairwell located within your building greater than three stories

Building Stairwell Identification Program shall be submitted to the Code Enforcement Bureau for approval within 90 days of receipt of notification.

All buildings greater than three stories must display in the lobby and fire control room a simplified schematic with the building footprint.

The footprint shall be an overhead view of the buildings exterior and the general layout of the lobby of the first floor. Stairwells shall be denoted by letter, starting next to the main entrance with "A" and continuing in a clockwise or left to right pattern. **(See Figure D102.1)**

Additionally, a sign approved by the Code Enforcement Bureau shall be provided at each landing in all interior stairwells, identifying the stairwells' letter, designating the floor level and the level of exit discharge. It should also state if there is no access tot he roof. (roof access means to the roof regardless whether they are locked).

The sign shall be located five (5) feet above the floor landing in a position that is readily visible when the stairwell door is opened or closed. This information may be stenciled directly onto the wall. **(See Figure D102.2).**

The signs must have lettering that is a minimum of 4 inches in height, and the lettering must be of a color contrasting with the background stairwell wall color.

Two copies of the footprint and the stairwell sign shall be submitted to the Code Enforcement Bureau for approval prior to installation.

FIGURE D102.1

EXAMPLE BUILDING FOOTPRINT AND STAIRWELL IDENTIFICATION LAYOUT

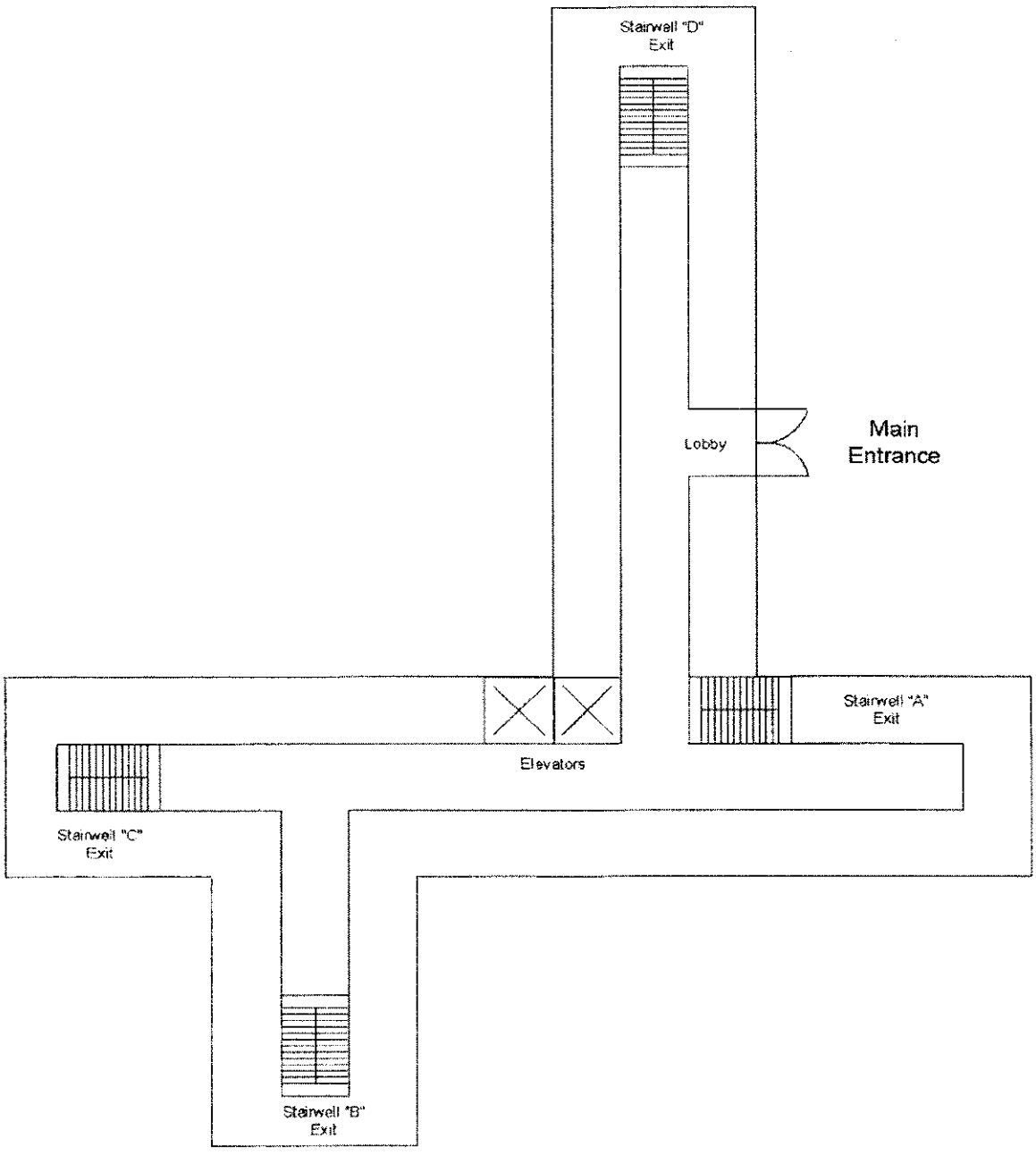

FIGURE D102.2

EXAMPLE STAIRWELL IDENTIFICATION SIGN

STAIRWELL - A

-

FLOOR - 12

-

EXIT DISCHARGE
FLOOR - 1

NO ROOF ACCESS

(5) Appendix F, Requirements For Exterior Spray Painting Operations is amended by adding the following:

APPENDIX F - REQUIREMENTS FOR EXTERIOR SPRAY PAINTING OPERATIONS

SECTION F101 - GENERAL

F101.1 Scope. This appendix provides permit and other requirements for exterior spray painting operations that do not exceed an accumulative area of 9 (nine) square feet per day.

SECTION F102 - REQUIREMENTS

F102.1 Permit Requirements. A permit shall be applied for with all required supporting documentation and upon approval, issued to perform limited exterior spray-painting. The applicant shall submit two copies of the proposed procedure outlining process to include the following: a complete list of Material Safety Data Sheets for materials to be utilized, a chemical/paint inventory, the method of on site storage, the method of transportation between sites, the method of paint application, the method of waste/spray paint recovery, site plans, list of all application areas in which spraying will occur, the type of on site fire protection, 24 hour emergency contact information and the site contact.

F102.2 General Requirements. The following general requirements shall apply to all exterior spray painting operations and are subject to review and approval by Code Enforcement Bureau personnel prior to commencing exterior spray painting operations.

The Hazardous Use Permit shall be kept in the on site contractors vehicle at all times. Absence of the on site permit will void permitted process and the area will be deemed non-compliant. If this occurs, all equipment and paint shall be removed from the City of Alexandria limits.

The applicant shall locate spray-painting operations a minimum of 50 feet from a building structure or a property line.

The applicant shall ensure the spray painting operation is not continuous in nature.

The applicant shall ensure that no exterior electrical equipment is within 20 feet unless it meets the requirement of NEC Class I, Division II, including flexible electrical extension cords, and approved by the Code Enforcement Bureau. Permit holder shall submit a site plan for approval for each site. Permit holder shall not implement spraying process until site plans are approved.

The applicant shall not use portable electrical lamps inside the spray-painting area.

The applicant shall provide a minimum of one (40-BC) dry chemical fire extinguisher outside the application area and within 30 feet of travel.

The applicant shall remove all possible ignition sources This shall include securing and stopping all motors on vehicles.

The applicant shall not permit open flames within 20 feet of the designated spray area.

The applicant shall not permit hot or heated surfaces within the designated spray area.

The applicant shall not permit smoking within the spray area. Signage shall be posted and visible from the exterior of the designated spray areas.

The applicant shall clean spray-painting equipment in a manner approved by the Fire Official Only class II or III solvents shall be utilized on the exterior.

The applicant shall provide a smooth surface for the limited area spray operation. Porous surfaces such as asphalt is not permitted.

If an interior limited area spray operation is approved and utilized, the applicant shall provide the area with approved fire protection and positive ventilation approved for flammable liquids.

The applicant shall ensure that all equipment and containers are listed for the flammable or combustible liquid use. If flammable liquids will be transferred from one container to another, the applicant shall ensure that at least one container is bonded and/or grounded.

The applicant shall ensure that Class I flammable liquids and/or solvents are not utilized for cleaning of equipment. Only Class II and III combustible liquids may be utilized for cleaning of equipment.

The applicant shall keep the limited spray-painting area clean of over spray and residue.

The applicant shall control odors, smoke and any other air pollution from operations at the site and prevent them from leaving the property or becoming a nuisance to neighboring properties, as determined by the Department of Transportation and Environmental Services.

The applicant shall not dispose of material by venting material into the atmosphere.

(6) Appendix H, Carnivals And Fairs is added:

APPENDIX H - CARNIVAL S AND FAIRS

H101.1 Scope. This appendix provides permit and other requirements for outdoor assemblies and events.

H102 General Requirements.

(a) Public Safety plan. A plan shall be submitted to the Director of Code Enforcement for all carnivals and fairs. The public safety plan shall include procedures for reporting emergencies, relocating and evacuating occupants, primary and secondary evacuation routes, occupant assembly points, employee responsibility and assignments, 24-hour emergency contact numbers and methods and types of security.

(b) Site Plan. A site plan shall be submitted to the Director of Code Enforcement for review and approval 45 days prior to the event. The site plan shall identify the positioning of amusement rides, fire department access points, fire lanes, fire hydrants, fire extinguishers, exit points, emergency evacuation routes and emergency shelters.

(c) Fire Prevention Code Permits. Operational permit requirements are outlines in Table 107.2. Permits will be required for tents and canopies exceeding 900 square feet, open flames, assembly of 50 persons or more and for the carnival or fair event itself.

(d) Inspections. Inspection requests for building, electrical, mechanical, plumbing and fire safety shall be made 24 business hours prior to the event.

(7) Chapter 1, section 105.1 is deleted and substitute the following:

105.1 Fire Official. The provisions of the Virginia Statewide Fire Prevention Code and this article shall be enforced by the Director of Code Enforcement as the Fire Official, and any other person authorized by the Fire Official or Fire Chief to conduct inspections under the Virginia Statewide Fire Prevention Code or this article.

(8) Chapter 1, section 107.1 is deleted and substitute the following:

107.1 Notice. It shall be unlawful to engage in any business activity involving the handling, storage or use of hazardous materials, substances or devices, or to maintain, store or handle materials, or to conduct processes producing conditions hazardous to life or property, or to install equipment utilized in connection with such activities, or to establish an assembly occupancy without first notifying the Director of Code Enforcement.

(9) Chapter 1, Table 107.2 is deleted and replaced with the following Table 107.2:

Table 107.2 Operational Permit Requirements and Exempt Quantities.

Description	Code Section	Permit Fee
Aerosol products. Aggregate quantity of Level 2 or Level 3 aerosol products in excess of 500 pounds (227 kg) net weight when manufacturing, storing or handling.	2801.2	$100.00
Amusement buildings.	403.3	$100.00
Asphalt Kettles.	303.10	$100.00
Aviation facilities.	1101.3	$100.00
Carnivals and fairs.	403.2	$250.00
Battery systems. Stationary lead-acid battery systems having a liquid capacity of more than 50 gallons (189L).	608.1.1	$100.00
Cellulose nitrate film. Storage, handling or use in any assembly or educational occupancy (Group A and E)	306.3	$100.00
Combustible dust-producing operations.	1301.2	$100.00
Combustible fibers. Storage and handling of combustible fibers in quantities greater than 100 cubic feet (2.8 m^2) Exception: Not required for agricultural storage.	2901.3	$100.00

Compressed gas. Storage, use or handling at normal temperature and pressure (NTP) of compressed gases in excess of the amounts listed below. Exception: Vehicles equipped for and using compressed gas as a fuel for propelling the vehicle. PERMITS AMOUNTS FOR COMPRESSED GASES TYPE OF GAS — AMOUNT (CUBIC FEET AT NTP) Corrosive — 200 Flammable (except cryogenic fluids and liquified petroleum gases). — 200 Highly toxic — Any Amount Inert, simple asphyxiant and non-flammable gases — 6000 Oxidizing (including oxygen) — 504 Toxic — Any Amount For SI: 1 cubic foot = 0.02832 m^3	3001.2	$100.00
Covered mall buildings.	408.11 .4	$500.00
Corrosives. Storage, use, handling: Gases — 200 cubic feet at (NTP) Liquids — 55 gallons Solids — 1000 pounds	3101.2	$100.00

Cryogenic fluids. Produce, store, transport on site, use, handle or dispense. Type — Inside Building (gal) — Outside Building (gal) Flammable — more than 1 — 60 Inert — 60 — 500 Oxidizing (includes oxygen) — 10 — 50 Physical or health hazard not indicated above — Any amount — Any amount Exception: Vehicles equipped for and using cryogenic fluids as a fuel for propelling the vehicle or for refrigerating the lading.	3201.2	$100.00
Cutting and Welding. Sweating pipes and hot works	2601.2	$100.00
Dry cleaning plants.	1201.2	$100.00
Exhibits and trade shows.	403.3	$100.00
Explosives and fireworks. An operational permit is required for the manufacture, possession, storage, handling. sale or other disposition, transportation or use of any quantity of explosive, explosive material, fireworks, or pyrotechnic special effects within the scope of Chapter 33, or to operate a terminal for handling explosive materials, or to deliver or receive delivery of explosives or explosive materials from a carrier between sunset and sunrise. **Explosive Vehicle Inspection.** (Valid for 6 months only)	3301.2	$100.00 $100.00
Emergency Vehicle Access Roadway.	503.1.1	$100.00
Fire hydrants and valves. Operate or use any fire hydrants or valves used for fire suppression service.	508.5.1.1	$100.00

Flammable and combustible liquids. 1. To use or operate a pipeline for the transportation with facilities or flammable or combustible liquids. This requirement shall not apply to the offsite transportation (DOTn) (see Section 3501.1.2) nor does it apply to piping systems (see Section 3503.6). 2. To store, handle or use of Class I liquids in excess of 5 gallons (19L) in a building or in excess or 10 gallons (37.9L) outside of a building, except that a permit is not required for the following: 2.1 The storage or use of Class I liquids in the fuel tanks of a motor vehicle, aircraft, motorboat, mobile power plant or mobile heating plant unless such storage, in the opinion of the Fire Official would cause an unsafe condition. 2.2 The storage or use of paints, oils, varnishes or similar flammable mixtures when such liquids are stored for maintenance, painting or similar purposes for a period of not more than 30 days. 3. To store, handle or use Class II or Class IIIA liquids in excess of 25 gallons (95L) in a building or in excess of 60 gallons (227L) outside a building, except for fuel oil used in connection with oil-burning equipment. 4. To remove Class I or Class II liquids from an underground storage tank used for fueling motor vehicles by means other than the approved, stationary on-site pumps normally used for dispensing purposes. 5. To operate tank vehicles, equipment, tanks, plants, terminals, wells, fuel-dispensing stations, refineries, distilleries and similar facilities where flammable and combustible liquids are produced, processed, transported, stored, dispensed or used. 6. To install, alter, remove, abandon, place temporarily out of service (for more than 90 days) or otherwise dispose of an underground, protected above-ground or above-ground flammable or combustible liquid tank. 7. To change the type of contents stored in a flammable or combustible liquid tank to a material which poses a greater hazard that for which the tank was designed and constructed. 8. To manufacture, process, blend, or refine flammable or combustible liquids.	3401.4	$100.00

Flammable Gases.	3501.2	$100.00
Flammable Solids.	3601.2	$100.00
Floor Finishing. Using Class I or Class II liquids exceeding 350 square feet (33 m²).	1510.1.2	$100.00
Fruit and crop ripening.	1601.2	$100.00
Fumigation and thermal insecticidal fogging.	1701.2	$100.00
Hazardous materials. **PERMIT AMOUNTS FOR HAZARDOUS MATERIALS** **TYPE OF MATERIAL** — **AMOUNT** Combustible liquids — See flammable and Combustible liquids Corrosive material — See compressed gases Gases — 55 gallons Liquids — 1000 pounds Solids — See Explosives Explosive materials — See explosives Flammable materials Gases — See compressed gases Liquids — See flammable and combustible liquids Solids — 100 pounds Highly Toxic materials Gases — See compressed gases Liquids — See flammable and combustible liquids Solids — 100 pounds Oxidizing materials Gases — See compressed gases Liquids Class 4 — Any amount Class 3 — 1 gallon Class 2 — 10 gallons Class 1 — 55 gallons Solids Class 4 — Any amount Class 3 — 10 gallons Class 2 — 100 gallons Class 1 — 500 gallons	2701.5	$100.00

PERMIT AMOUNTS FOR HAZARDOUS MATERIALS (CONTINUED) **TYPE OF MATERIAL** — **AMOUNT** Organic peroxides Liquids Class I — Any amount Class II — Any amount Class III — 1 gallon Class IV — 2 gallons Class V — No permit required Solids Class I — Any amount Class II — Any amount Class III — 10 pounds Class IV — 20 pounds Class V — No permit required Pyrophoric materials Gases — See compressed gases Liquids — Any amount Solids — Any amount Toxic materials Gases — See compressed gases Liquids — 10 gallons Solids — 100 pounds Unstable (reactive) materials Liquids Class 4 — Any amount Class 3 — Any amount Class 2 — 50 pounds Class 1 — 100 pounds Water-reactive materials Liquids Class 3 — Any amount Class 2 — 5 gallons Class 1 — 55 gallons Solids Class 3 — Any amount Class 2 — 50 pounds Class 1 — 500 pounds For SI: 1 gallon = 3.785 L, 1 pound = 0.454 kg.	2701.5	$100.00
Heliports and Helistops.	1107.1.1	$100.00

Highly Toxic Materials.	3701.2	$100.00
High-piled storage. Use a building or portion exceeding 500 square feet (46 m^2).	2301.2	$100.00
Indoor display of vehicles or equipment.	314.4.1	$100.00
Indoor Pyrotechnics.	3308.2	$250.00
Industrial ovens.	2101.2	$100.00
Lumber yards and woodworking plants. Storage or processing exceeding 100,000 board feet (8,333 ft^3) (236m^3)	1901.2	$100.00
Liquid or gas fueled vehicles in assembly buildings.	3803.2.2.1	$100.00
LP Gas. Storage and use inside or outside of any building. Exception: 1. Individual containers with 500 gallons (1893L) water capacity or less serving occupancies in Use Group R-3. 2. Operation of cargo tankers that transport LP gas.	3801.2	$100.00
Magnesium. Melt, cast, heat treat or grind more than 10 pounds (4.54 kg).	3606.1.2	$100.00
Miscellaneous combustible storage. Store in any building or upon any premises in excess of 2,500 cubic feet (71m^3) gross volume of combustible empty packing cases, boxes, barrels or similar containers, rubber tires, rubber cork or similar combustible material.	315.1.2	$100.00
Open burning. **Open burning - Charitable organizations.**	307.2	$100.00 $10.00
Open flames, heat producing appliances, or torches for removing paint.	308.4.1	$100.00
Organic coatings. Manufacturing operation producing more than 1 gallon (4L) of an organic coating in one day.	2001.2	$100.00
Organic peroxides.	3901.2	$100.00
Places of Assembly/educational. occupancy less than 50 persons occupancy 50 to 100 persons occupancy over 100 persons	408.1.1	 $50.00 $100.00 $250.00
Private fire hydrants.	508.5.1.1	$100.00
Pyrophoric materials.	4101.2	$100.00

Pyroxylin plastics. Storage and handling of more that 25 pounds (11kg) or cellulose nitrate (pyroxylin) plastic and for the assembly or manufacture of articles involving pyroxylin plastics.	4201.2	$100.00
Refrigeration equipment.	606.1.2	$100.00
Repair Garages, Service Stations and Motor Fuel Dispensing Facilities	2201.2	$100.00
Semiconductor Fabrication Facilities - HPM Facilities	1801.5	$250.00
Special Outdoor Assembly and Events.	403.1.2	$250.00
Application of Flammable Finishes, Spraying and Dipping.	1501.2	$100.00
Storage of scrap tires and tire by-products. Establish, conduct or maintain storage of scrap tires and tire by-products exceeding 2,500 cubic feet (71m^3) of total volume of scrap tires and for indoor storage of tires and tire by-products.	2509.3	$100.00
Temporary membrane structures, tents and canopies.	2403.2	$100.00
Tire rebuilding plants.	2501.2	$250.00
Torches for removing paint and sweating pipe.	308.4.1	$100.00
Unstable (reactive) materials.	4301.2	$100.00
Waste material and junk yards.	316.2	$100.00
Water reactive materials.	4401.2	$100.00
Wood products. Store chips, hogged material, lumber or plywood in excess of 200 cubic feet (6 m^3)	1907.1.1	$100.00

(10) Chapter 1, Section 107.12 is amended by adding the following after the last sentence of the paragraph to read:

The permit fee schedule is shown in Table 107.2, Operational Permit Requirements.

(11) Chapter 1, Section 108.3.1 is deleted and substitute the following:

108.3.1 Period of validity. Permits are valid for a period of 12 months from issuance, unless a different period is stated on the permit or the permit is revoked. Notwithstanding the foregoing, multiple permits issued at different times for the same location shall all expire at the same time as the first permit issued for the location.

(12) Chapter 1, Section 108.3.5 is amended by adding the following subsections:

108.3.5.1 Access to permit premises. Any person or business required by section 107.2 to have a permit(s) on premises shall make the necessary keys, any manufacturers material safety data sheets related to products regulated by the permit(s), location of the operation subject to permit(s) within the premises, emergency personnel information and other pertinent information relating to the permitted activity available to fire department personnel by use of an approved locking box on the exterior of the building.

108.3.5.2 Permit location. Permits are valid only at the location stated in the permit and cannot be transferred to a different location or address.

108.3.5.3 Permit location - exception. Permits issued under sections 308.1.1 for the use of a heat producing appliance or torch to remove paint of 2601.2 for cutting and welding operations may be used on a citywide basis during the period of validity of the permit. All necessary fire protection equipment required by section 308.4 and Chapter 26 of the Virginia Statewide Fire Prevention Code, or other referenced codes or standards, must be in place and ready for use at each location prior to beginning operations covered under these types of permit(s).

(13) Chapter 1, Section 110 is amended by adding subsection 110.7:

110.7 Imminent danger or threat to human health or safety or to property. If the Fire Official determines that any violation creates an imminent danger or threat to human health or safety or to property, the Fire Official may forthwith correct or abate such violation, and request that the City Attorney institute appropriate legal proceedings to recover the full cost of such response from the property owner, tenant or other responsible party.

(14) Chapter 2, Section 202 is amended by adding the following definition:

Person: Includes a corporation, firm partnership association, organization or any other group acting as a unit, as well as individuals. It shall also include an executor, administrator, trustee, receiver or other representative appointed according to law. Whenever the term "person" appears in any section of this code prescribing a penalty or fine, as to partnerships and associations, the word shall include the partners or members thereof, and as to corporations, shall include the officer, agents or members thereof, who are responsible for any violation of such section.

(15) Chapter 3, Section 301.2 Permits is deleted.

(16) Chapter 3, Section 303 is amended by changing the code subsections:

303.10 Permits. Permits shall be obtained from the Director of Code Enforcement in accordance with Table 107.2.

303.10.1 Safety Plan. Where required by the Director of Code Enforcement, a fire safety plan, emergency procedures, and employee training programs for roof installation, repair, and other related operations shall be approved by the Director of Code Enforcement or designee prior to operations.

(17) Chapter 3, Subsection 304.1.1 is amended by adding the following:

304.1.1 Waste materials. Accumulations of wastepaper, wood, hay, straw, weeds, litter or combustible or flammable wastes, cooking oils, or rubbish of any type shall not be permitted to remain on a roof or in any court, yard, vacant lot, alley, parking lot, open space, or beneath a grandstand, bleacher, pier, wharf, manufactured home, recreational vehicle or other similar structure.

(18) Chapter 3, Subsection 304.3 is deleted and substitute the following:

304.3 Containers. Combustible rubbish and waste material shall be stored in accordance with Section 304.3.1 through 304.3.3.

(19) Chapter 3, Subsection 304.3 is amended by adding the following subsections:

304.3.1.1 Container lids. All containers shall be equipped with a self-closing lid unless approved by the Director of Code Enforcement.

304.3.2.1 Secondary containment. All cooking oil containers exceeding 5.33 cubic feet (40 gallons) shall be provided with approved secondary containment.

(20) Chapter 3, Subsection 306 is amended by adding the following subsections:

306.3 Permits. Permits shall be obtained from the Director of Code Enforcement in accordance with Table 107.2.

(21) Chapter 3, Section 307 is amended by deleting and substituting the following:

307.1 General. A person shall not cause or allow open burning unless approved in accordance with this code and the air pollution control code (chapter 1 of title 11 of the City Code) of the city. No person shall kindle, or authorize to be kindled or maintain any fire in such a manner that it constitutes a danger to public health and safety as determined by the Director of Code Enforcement.

307.2 Permit Required. A permit shall be obtained from the Director of Code Enforcement in accordance with Table 107.2 prior to kindling a fire for recognized silvicultural or range or wildlife management practices, prevention or control of disease of pests, or a bonfire. Application for such approval shall only be presented by and permits issued to the owner of the land upon which the fire is to be kindled.

307.2.1 Allowable burning: Open burning shall be allowed without prior notification to the Code Official for recreational fires, highway safety flares, fires for the training of fire fighters under the direction of the Fire Department, smudge pots.

307.2.2 Prohibited Open Burning. Open burning that will be offensive or objectionable because of smoke or odor emissions when atmospheric conditions or local circumstances make such fires hazardous shall be prohibited. The Fire Code Official is authorized to order the extinguishment by the permit holder of the Fire Department of open burning.

(22) Chapter 3, Section 308.1.1 is deleted:

(23) Chapter 3, Section 308.4 is amended by deleting and substituting the following text and subsections:

308.4 Torches for removing paint and sweating pipe. Persons utilizing a torch or other flame-producing device for removing paint from a structure shall provide a minimum of one portable fire extinguisher complying with Section 906 and with a minimum 4-A rating, two portable fire extinguishers, each with a minimum 2-A rating, or a water hose connected to the water supply on the premises where such burning is done. The person doing the burning shall remain on the premises 1 hour after the torch or flame-producing device is utilized. This person shall and shall have access to a means of contacting the Fire Department in an emergency.

308.4.1 Permit required. A permit shall be obtained from the Director of Code Enforcement in accordance with Table 107.2 prior to the utilization of a torch of other flame-producing device for removing paint. See 2601.2

(24) Chapter 3, Section 314.4 is amended by deleting and substituting the following:

314.4 Vehicles and equipment. It shall be unlawful to store, display or repair in or on a building or structure, or any part thereof, any vehicle, tool or equipment that has a fuel tank containing a flammable or combustible liquid or liquified petroleum gas as a source of fuel, unless the building or structure is built and maintained in accordance with the requirements of the Uniform Statewide Building Code, and this code, for such storage, display or repair; provided that this section shall not apply to single-family dwellings where the storage, display or repair is not conducted as a business. Where indoor display of vehicles is permitted by the Fire Official, the following safeguards shall be employed:

1) Batteries are disconnected
2) Fuel in tank does not exceed one-quart tank or 5 gallons (19L), whichever is least.
3) Fuel tanks and fill openings are closed and sealed to prevent tampering.
4) Vehicles, boats or other motorcraft equipment are not fueled or defueled within the building.

(25) Chapter 3, Section 314 is amended by adding the following subsection:

314.4.1 Permit Required. A permit shall be obtained from the Director of Code Enforcement in accordance with Table 107.2.

(26) Chapter 3, Section 314.0 is amended as adding subsection 314.5

314.5 Storage or display in roofed-over malls. No combustible goods, merchandise or decorations shall be displayed or stored in a roofed-over mall unless approved by the Fire Official.

(27) Chapter 3, Subsection 315.1 is amended by deleting the second sentence:

315.1 General. Storage, use, and handling of miscellaneous combustible materials shall be in accordance with this section.

(28) Chapter 3, Subsection 315.1 is amended by adding the following subsection:

315.1.2 Permit Required. A permit shall be obtained from the Director of Code Enforcement in accordance with Table 107.2.

(29) Chapter 3 Subsection 315.2.1 Ceiling clearance is amended by deleting and substituting the following:

315.2.1 Ceiling clearance. Storage inside any structure shall be maintained in a neat, orderly and safe manner. No storage shall be permitted within 24 inches of the lowest portion of a ceiling, or the supporting structure thereof, or within 18 inches of the deflector plate of a sprinkler head, is so equipped, in any building. In buildings where sprinkler heads are mounted above the supporting structure of the roof, no storage shall be permitted within 18 inches of the supporting structure.

(30) Chapter 3 is amended by adding a new section 316.0:

316.0 Waste Materials and Junk Yards.

316.1 General. No person making, using, storing, having charge of or having under his control in a building or on any vacant lot, alley, parking lot, open space or property any combustible excelsior, rubbish, sacks, bags, litter, hay, straw or other combustible waste material shall fail at the close of each day to remove all such material which is not compactly baled and/or stacked in an orderly manner, from the building or on any vacant lot, alley, parking lot, open space or property or store it in suitable vaults or in metal-lined and covered receptacles or bins. The Director of Code Enforcement shall require suitable baling equipment to be installed in stores, apartment buildings, factories and other buildings where accumulations of paper and waste material are not removed at least every second day.

316.2 Permits. Permits shall be obtained from the Director of Code Enforcement in accordance with Table 107.2 for the operation of waste material facilities, junkyards or any facility where 2500 cubic feet or material is stored.

(31) Chapter 3 is amended by adding a new section - 317.0

317.0 Noxious, Flammable or combustible vapors.

317.1 General. This section shall apply to any process or operation which produces flammable, combustible or noxious fumes or vapors, other than during the regular course of processed or operations normally conducted at the premises.

317.2 Ventilation. All such processes or operations shall have sufficient natural or supplies ventilation to prevent the migration of such fumes or vapors within the structure. Such processes or operations shall be conducted at times when the building has the fewest number of occupants.

317.3 Ignition sources. No such process or operation shall be conducted prior to assuring that all potential ignition sources have been identified and extinguished.

317.4 Alarm and sprinkler systems. If the potential exists to activate an alarm system by conducting such a process or operation, the alarm system shall be disabled and a fire watch in accordance with Appendix B, "Requirements for a Fire Watch" shall be maintained by a person other than the person conducting the process or operation. The person maintaining the fire watch shall have the capability of contacting the Fire Department without having to reactivate the alarm system. No disabling of the alarm system shall be permitted, without prior notification to Fire Department Communications Division. Any protective measures taken to protect either the fire alarm or sprinkler systems at the premises, such as covering detectors or taping sprinkler head, shall be reported to the communication section of the fire department, prior to such measures being taken. At the completion of the process or operation, all such systems shall be fully restored to function and the fire department shall be so notified.

317.5 Fire Department notification. Any person conducting such process or operation shall notify the Fire Department Communications Division of the time, date and place at which such process or operation will be conducted at least 24 hours prior to commencement. Such notice is required even is a permit has previously been obtained for the process or operation.

317.6 Occupant notification. The owner, tenant, property manager or other person responsible for causing such process or operation to be conducted shall give reasonable notice to occupants of the premises of the type of process, date and time of occurrence and of the potential for the production of flammable, combustible or noxious fumes or vapors.

(32) Chapter 4, Section 403 is amended by changing the code subsections:

403.2 Permits. A permit shall be obtained from the Director of Code Enforcement for special outdoor assembly events, carnivals and fairs in accordance with Table 107.2

403.2.1 Safety plan. A safety plan outlining the event shall be submitted to the Director of Code Enforcement 30 days prior to the event start date. The safety plan shall include a site map identifying locations of fire lanes, apparatus access points, food vendors, amusement rides, tents, hazardous materials, hydrants, citizens assembly points and emergency evacuation shelters.

403.2.2 Emergency coordinators. The event coordinator shall provide the Director of Code Enforcement with on-site and emergency contact telephone numbers for at least five event coordinators.

403.2.3 Outdoor food handling. All deep fat fryers, woks utilized for deep fat frying or similar cooking devices using hot oil or grease shall be in a mobile unit or trailer with a vented hood and an approved fire suppression system.

403.3 Permits. A permit shall be obtained from the Director of Code Enforcement for all indoor exhibits, trade shows, and special amusement events in accordance with Table 107.2.

403.3.1 Permits. A permit shall be obtained from the Director of Code Enforcement for the utilization of a space or structure for the purposed of assembly in accordance with Table 107.2

(33) Chapter 4, Section 404 is amended by adding and editing the following subsection:

404.2.1 Fire evacuation plans. Fire evacuation plans for all educational occupancies shall be submitted to the fire official for review and approval at least 30 days prior to the start of each school session, unless otherwise approved by the Fire Official.

(34) Table 405.2 is amended and a new footnote is added as follows:

Table 405.2
FIRE AND EVACUATION DRILL
FREQUENCY AND PARTICIPATION

GROUP OR OCCUPANCY	FREQUENCY	PARTICIPATION
Group A	Quarterly	Employees
Group E	Monthly [a]	All occupants [c]
Group I	Quarterly on each shift	Employees [b]
Group R-1	Quarterly on each shift	Employees
Group R-4	Quarterly on each shift	Employees

[a] The frequency shall be permitted to be modified in accordance with Section 408.3.2.
[b] Fire and evacuation drills in residential care assisted living facilities shall include complete evacuation of the premises in accordance with Section 408.10.5. Where occupants receive habilitation or rehabilitation training, fire prevention and fire safety practices shall be included as part of the training program.
[c] In those buildings equipped with "areas of rescue assistance" evacuation to such areas by persons designated to use such areas, shall be deemed to comply with the requirements of this section.

(35) Chapter 4, section 408.1 is amended by adding the following:

408.1.1 Permits. Permits shall be obtained from the Director of Code Enforcement for all places of assembly and education in accordance with Table 107.2.

(36) Chapter 4, Section 408.11 is amended as follows:

408.11 Covered mall buildings. Covered mall buildings shall comply with the provisions of Sections 408.11.1 through 408.11.4.

(37) Chapter 4, Section 408.11 is amended by adding the following subsection:

408.11.4 Permit required. A permit shall be obtained from the Director of Code Enforcement in accordance with Table 107.2.

(38) Chapter 5, Section 501.2 Permits is deleted.

(39) Chapter 5, Section 501.4 is reinstated and amended as follows:

501.4 Timing of installation: Fire apparatus access roads and water supply for fire protection shall be installed and maintained in accordance with Appendix A "Water and Fire Requirements for New Construction," prior to, and during construction, except when alternative methods of protection are approved by the Director of Code Enforcement. Temporary street signs shall be installed at each intersection when construction of new roadways allows passage of vehicles in accordance with Section 505.2.

(40) Chapter 5, Section 503.1 is amended by deleting and substituting the following:

503.1 Emergency access roadways. Emergency vehicle access shall be installed and maintained in accordance with this section and Appendix A "Water and Fire Requirements for New Construction."

(41) Chapter 5, Sections 503.1.1 and 503.1.2 are deleted and the following subsections substituted.

503.1.1 Permit Required. A permit shall be obtained from the Director of Code Enforcement in accordance with Table 107.2 for all emergency vehicle access roadways.

503.1.2 Temporary fire lanes. The Fire Official is authorized to designate and identify temporary fire lanes during emergency conditions to ensure access of fire department equipment and personnel.

(42) Chapter 5, Section 503.2 through 503.2.7 are deleted and the following subsection substituted:

503.2 Signs and markings. The property owner or designee shall supply, install and maintain signs and other markings to designate and identify fire lanes (emergency vehicle easements) as directed by the Director of Code Enforcement. The signs shall identify the starting point, continuation and end point for all fire lanes.

(43) Chapter 5, Section 503.3 is deleted and the following subsection substituted:

503.3 Sign Specifications. Fire lane signs shall conform to the following standards, and shall be installed in accordance with the requirements of Appendix A "Water and Fire Requirements for Site Plans and New Construction" as follows:

Metal construction, dimensions 12 inches by 18 inches.

Red letters on a reflective white background, with a three-eights inch red border around the entire outer edge of the sign.

Red directional arrows on the sign shall be used to indicate the direction and continuation of the fire lanes.

Lettering size and layout with uniform spacing between words and centered inside the red border as follows:

NO (2 inches)
PARKING (2 inches)

FIRE (2 ½ inches)
LANE (2 ½ inches)

(directional arrow) (1 inch x 6 inch solid shaft with solid head 1½ inches wide and 2 inches deep)

EM. VEH. EAS. (1 inch)

City of Alex. (½ inch) or approved City Seal

(44) Chapter 5, Section 503.4 is amended by adding the following text:

503.4 Obstruction of fire apparatus access roads. Fire apparatus access roads and fire lanes shall not be obstructed in any manner, including the parking vehicles. The minimum widths and clearances established in Section 503.2.1 shall be maintained at all times.

(45) Chapter 5, Section 506 is deleted and substitute the following:

506.1 Key repository: Owners of building in which fire alarm or fire suppression systems are installed after June 14, 1997, shall provide a key repository to the satisfaction of the Director of Code Enforcement. This key repository shall be of a type approved by the Director of Code Enforcement and shall be located on the exterior of the building, near the main entrance. Keys shall be placed in the repository to allow the Fire Department access to investigate alarms of fire reported from the building.

(46) Chapter 5, section 508 is deleted and substitute the following:

508.3 Fire flow. Fire flow requirements for buildings or portions of buildings and facilities shall be determined in accordance with Appendix A "Water and Fire Requirements for Site Plans and New Construction".

(47) Chapter 5, Section 508.5.1 is deleted and substitute the following:

508.5.1 Where required. Fire hydrants shall be installed as required by Appendix A "Water and Fire Requirements for Site Plans and New Construction".

(48) Chapter 5, Section 508.5.1 is amended by adding the following subsection:

508.5.1.1 Permits. Permits shall be obtained from the Director of Code Enforcement in accordance with Table 107.2 for all private fire hydrants to operate or use fire hydrants or valves used for fire suppression service.

> Exception: A permit is not required for authorized employees of the City of Alexandria, the Virginia American Water Company or their designees that manage the water system or the Fire Department to use or operate fire hydrants or valves.

(49) Chapter 5, Section 509, is amended by add a section title.

509.1.1 Operations Manual. All buildings that have a fire control room shall equip that room with an operations manual. The fire official shall review and approve the contents of the manual.

(50) Chapter 6, Subsection 601.2 is deleted.

(51) Chapter 6, Subsection 606 is amended by adding the following subsection: 606.1.2

606.1.2 Permit required. A permit shall be obtained from the Director of Code Enforcement in accordance with Table 107.2.

(52) Chapter 6, Subsection 608 is amended by adding the following subsection: 608.1.1

608.1.1 Permit required. A permit shall be obtained from the Director of Code Enforcement in accordance with Table 107.2.

(53) Chapter 6, Subsection 610 is amended by adding the following:

610.3 Service. All commercial kitchen hoods and ductwork shall be cleaned, serviced and maintained at a minimum of 6-month intervals. A cleaning schedule shall be submitted for review and approval to the Director of Code Enforcement.

(54) Chapter 9, Subsection 901.3 is deleted.

(55) Chapter 9, Section 901.6.2 is deleted and substitute the following:

901.6.2 Test records. A completed written record of all tests and inspections required under this chapter shall be maintained on the premises by the owner or occupant responsible for said premises and a copy of any such record shall be provided to the Code Official after the completion of any test or inspection. Accurate logs shall be maintained, indicating the number, location and type of device tested. Any defect, modification or repair shall be logged, and the log shall be made available to the Code Official. All records of system inspections, tests and maintenance required by the referenced standards shall be maintained on the premises for a minimum of 5 years and made available to the Code Official upon request.

901.6.3 Test responsibility and notification: The Code Official shall not be responsible for any damages incurred during any test required under the provisions of this chapter. Any test required under the provisions of this chapter shall be performed in the presence of the Code Official, unless such requirement is waived by the Code Official. Any such test shall be scheduled at the convenience of the owner or occupant responsible for said premises and the Code Official.

901.6.4 Periodic testing, inspection and maintenance: All water-based extinguishing systems including fire sprinkler, water mist, water-spray, and standpipe systems shall be periodically inspected, tested and maintained in accordance with the requirements of NFPA 25 listed in Chapter 45. Any required inspections and tests shall be performed in the presence of the Code Official, unless such requirement is waived by the Code Official. Fees for the attendance of the Code Official shall be charged in accordance with the fee schedule of the Code Enforcement Bureau.

901.6.5 Periodic testing, inspection and maintenance. All foam-extinguishing systems shall be maintained, periodically inspected and tested in accordance with NFPA 11, 11A and 16 listed in Chapter 45. Any required inspections and tests shall be performed in the presence of the Code Official unless such requirement is waived by the Code Official. Fees for the attendance of the Code Official shall be charged in accordance with the fee schedule of the Code Enforcement Bureau.

901.6.6 Periodic testing, inspection and maintenance. All fire suppression systems including those listed in Sections 901.7 through 901.11 shall be periodically inspected, tested, and maintained in accordance with

the requirements and standards listed in Chapter 45. Any required inspections and tests shall be performed in the presence of the Code Official unless such requirement is waived by the Code Official. Fees for the attendance of the Code Official shall be charged in accordance with the fee schedule of the Code Enforcement Bureau.

901.6.7 Periodic testing, inspection and maintenance. All carbon dioxide extinguishing systems shall be maintained, periodically inspected and tested in accordance with NFPA 12 listed in Chapter 45 and Sections 904.8.1 through 904.8.5. Any required inspections and tests shall be performed in the presence of the Code Official unless such requirement is waived by the Code Official. Fees for the attendance of the Code Official shall be charged in accordance with the fee schedule of the Code Enforcement Bureau.

901.6.8 Periodic testing, inspection and maintenance. All halogenated extinguishing systems shall be maintained, periodically inspected and tested in accordance with NFPA 12 A listed in Chapter 45 and Sections 904.9.1 through 904.9.3. Any required inspections and tests shall be performed in the presence of the Code Official, unless such requirement is waived by the Code Official. Fees for the attendance of the Code Official shall be charged in accordance with the fee schedule of the Code Enforcement Bureau.

901.6.9 Periodic testing, inspection and maintenance. All clean agent fire extinguishing systems shall be maintained, periodically inspected and tested in accordance with NFPA 2001 listed in Chapter 45, the system manufacturer's instructions and Sections 904.10.1 through 904.10.3. Aby required inspections and tests shall be performed in the presence of the Code Official, unless such requirement is waived by the Code Official. Fees for the attendance of the Code Official shall be charged in accordance with the fee schedule of the Code Enforcement Bureau.

901.6.10 Periodic testing, inspection and maintenance. All dry-chemical extinguishing systems shall be maintained, periodically inspected and tested in accordance with NFPA 17 listed in Chapter 45, the system manufacturer's instructions and Sections 904.11.1 through 904.11.4. Any required inspections and tests shall be performed in the presence of the Code Official. Fees for the attendance of the Code Official shall be charged in accordance with the fee schedule of the Code Enforcement Bureau.

901.6.11 Periodic testing, inspection and maintenance. All wet-chemical extinguishing systems shall be maintained, periodically inspected and tested in accordance with NFPA 17A listed in Chapter 45 and Sections 904.5.1 and 904.5.2. Any required inspections and tests shall be performed in the presence of the Code Official, unless such requirement is waived by the Code Official. Fees for the attendance of the Code Official shall be charged in accordance with the fee schedule of the Code Enforcement Bureau.

901.6.12 Periodic testing, inspection and maintenance. All fire detection and alarm systems shall be maintained, periodically inspected and tested in accordance with NFPA 72 listed in Chapter 45 and section 907.20.1 and 907.20.5. Any required inspections and tests shall be performed in the presence of the Code Official, unless such requirement is waived by the Code Official. Fees for the attendance of the Code Official shall be charged in accordance with the fee schedule of the Code Enforcement Bureau.

901.6.13 Periodic testing, inspection and maintenance. Emergency alarms in building, rooms or areas used for the storage of hazardous materials shall be maintained, periodically inspected and tested. Test methods and frequency shall be in accordance with NFPA 72 listed in Chapter 45. Any required inspections and tests shall be performed in the presence of the Code Official. unless such requirement is waived by the Code Official. Fees for the attendance of the Code Official shall be charged in accordance with the fee schedule of the Code Enforcement Bureau.

901.6.14 Periodic testing, inspection and maintenance. All fire pumps shall be inspected, tested and periodically inspected and tested in accordance with NFPA 25 listed in Chapter 45. Any required inspections and tests shall be performed in the presence of the Code Official, unless such requirement is

waived by the Code Official. Fees for the attendance of the Code Official shall be charged in accordance with the fee schedule of the Code Enforcement Bureau.

901.6.15 Periodic testing, inspection and maintenance. Water tanks, fire service mains, and fire hydrants shall be periodically inspected, tested and maintained in accordance with NFPA 25 listed in Chapter 45. Any required inspections and tests shall be performed in the presence of the Code Official, unless such requirement is waived by the Code Official. Fees for the attendance of the Code Official shall be charged in accordance with the fee schedule of the Code Enforcement Bureau.

901.6.16 Periodic testing, inspection and maintenance. All fire department connections shall be maintained, periodically inspected and tested and maintained in accordance with NFPA 25 listed in Chapter 45. Any required inspections and tests shall be performed in the presence of the Code Official, unless such requirement is waived by the Code Official. Fees for the attendance of the Code Official shall be charged in accordance with the fee schedule of the Code Enforcement Bureau.

901.6.17 Periodic testing, inspection and maintenance. All smoke control and smoke management systems shall be maintained, periodically inspected and tested and maintained in accordance with the requirements listed in Section 909.21. Any required inspections and tests shall be performed in the presence of the Code Official, unless such requirement is waived by the Code Official. Fees for the attendance of the Code Official shall be charged in accordance with the fee schedule of the Code Enforcement Bureau.

901.6.18 Periodic testing, inspection and maintenance. All access control systems shall be maintained, periodically inspected and tested and maintained in conjunction with any fire protection system inspection and test. Any required inspections and tests shall be performed in the presence of the Code Official, unless such requirement is waived by the Code Official. Fees for the attendance of the Code Official shall be charged in accordance with the fee schedule of the Code Enforcement Bureau.

(56) Chapter 9 Section 901.7 is amended by adding the following text after the first sentence to the first paragraph.

901.7 Systems out of Service. Fire watches shall be established and operate in accordance with Appendix B, "Requirements for a Fire Watch".

(57) Chapter 9, Section 903.5 is amended by adding the following text and subsections:

903.5 Testing and maintenance. Sprinkler systems shall be tested and maintained in accordance with this Section and Section 901.

903.5.1 Flow test. All systems shall be tested at the test pipe to determine that the water-flow detecting devices, including the associated alarm circuits are in proper working order. Dry pipe systems shall deliver water to the inspectors' test pipe in not more than 60 seconds.

903.5.2 Air test. Before the water supply for a dry pipe system is turned on and the system is placed into service, the system shall be tested with air pressure of at least 40 psi (276 k Pa) and be allowed to stand 24 hours with a maximum pressure loss of 1 ½ psi (10.34 k Pa). To prevent damaging the valve, the clapper valve of a differential-type dry pipe valve shall be held off the seat during any test at a pressure in excess of 50 psi (344.75 k Pa). Automatic air pressure maintenance devices shall be capable of restoring normal operating pressure to the system within 30 minutes, except for low-differential dry pipe systems where the maximum recovery time shall be 60 minutes.

(58) Chapter 9, Section 906 is amended by adding the following:

906.11 Maintenance. Maintenance of fire extinguishers shall be in accordance with NFPA 10, but no less than monthly visual checks, yearly service by a certified individual and hydrostatic test of cylinders every five years.

(59) Chapter 9, Section 912.3 is deleted and substitute the following:

912.3 Access. Immediate access to fire department connections shall be maintained at all times and without obstructions by fences, bushes, trees, walls or any other object for a minimum of 4 feet.

(59) Chapter 10, Section 1002.1 is ameneded by adding the following definition:

Overcrowding: A condition in which the number of occupants exceeds the total number approved persons permitted to occupy a structure at any one time.

(60) Chapter 10, Section 1008.1.8.7 , exception 3 is deleted.

(61) Chapter 10, Section 1024 is amended by changing the following code subsection:

1024.16 Accountability. A person responsible for controlling the occupancy capacity shall develop a system to manage the occupancy capacity for approval by the Director of Code Enforcement. This system shall be implemented outside the main entrance and consist of a mechanism to count persons as they enter a facility without restricting egress.

(62) Chapter 10, Section 1027 is amended by adding the following subsections:

1027.6 Overcrowding. A person shall not permit overcrowding or admittance of any person beyond the approved occupant load. The code official, upon finding overcrowded conditions or obstruction in aisles, passageways or other means of egress, or upon finding any condition which constitutes a hazard to life and safety, shall cause the occupancy, performance, presentation, spectacle or entertainment to be stopped until such a condition or obstruction is corrected and the addition of any further occupants prohibited until the approved occupant load is re-established.

1027.7 Operator responsibility. The operator or the person responsible for the operation of an assembly or educational occupancy shall check egress facilities before such building is occupied to determine compliance with this section. If such inspection reveals that any element of the required means of egress cannot be accessed, is obstructed, locked, fastened or otherwise unsuited for immediate utilization, admittance to the building shall not be permitted until necessary corrective action has been completed.

(63) Chapter 11, Subsection 1101.3 is deleted and substitute the follows:

1101.3 Permits. Permits to operate aircraft-refueling vehicles, application of flammable or combustible finishes, and hot works shall be obtained from the Director of Code Enforcement in accordance with Table 107.2.

(64) Chapter 11, Section 1107 is amended by adding the following subsection:

1107.1.1 Permits. Permits shall be obtained from the Director of Code Enforcement in accordance with Table 107.2

(65) Chapter 11, Section 1107.2 is amended by adding the following subsection:

1107.2.1 Safety Personnel. A minimum of two trained safety personnel shall supervise the landing area during landing and takeoff. Safety personnel shall be dedicated to the landing area and ensure the area is clear of pedestrians and unauthorized personnel.

(66) Chapter 12, Subsection 1201.2 is deleted and substitute the following:

1201.2 Permits. Permits shall be obtained from the Director of Code Enforcement in accordance with Table 107.2.

(67) Chapter 13, Subsection 1301.2 is deleted and substitute the following:

1301.2 Permits. Permits shall be obtained from the Director of Code Enforcement in accordance with Table 107.2.

(68) Chapter 14, Section 1403 is amended by adding the following subsections:

1403.1.1 Plans. Floor plans designating location of heating equipment, heating fuel source, exits, fire extinguishers and fire department access points shall be submitted to the code official for approval prior to implementation of temporary heat operations.

1403.1.2 Membranes and Sheathing. All material utilized for isolation of heating areas shall be fire retardant.

(69) Chapter 14, Section 1404 is amended by adding the following sentence to the end of paragraph 1404.5:

Refer to Appendix B for additional fire watch requirements.

(70) Chapter 14, Section 1405 is amended by adding the following subsection:

1405.7 Refueling Tanks. All tanks utilized on construction sites shall be equipped with secondary containment and vehicle protection.

(71) Chapter 14, Section 1410 is amended by adding the following subsection:

1410.3 Building Access. At least two covered access points shall be provided. Each access point shall be posted with the building address, equipped with an approved fire safety map and constructed of approved fire retardant materials.

(72) Chapter 15, Section 1501 is amended by adding the following subsections:

1501.1 4. Floor surfacing or finishing operations.

1501.1 5. The application of dual-component coatings or Class I or II liquids when applied by brush or roller in quantities exceeding 1 gallon (4L).

(73) Chapter 15, Section 1501 is amended by adding the following subsection:

1501.2 Permits. Permits shall be obtained from the Director of Code Enforcement in accordance with Table 107.2 for spraying, dipping, and exterior spraying operations included within the scope of this chapter and Appendix F "Requirements for Exterior Spray Painting Operations" utilizing any amount of flammable or combustible liquids on any working day.

(74) Chapter 15, Section 1510 add the following subsection:

1510.1.1 Permits. Permits shall be obtained from the Director of Code Enforcement in accordance with Table 107.2

(75) Chapter 16, Section 1601.2 is deleted and substitute the following:

1601.2 Permits. Permits shall be obtained from the Director of Code Enforcement in accordance with Table 107.2.

(76) Chapter 17, Section 1701.2 is deleted and substitute the following:

1701.2 Permits. Permits shall be obtained from the Director of Code Enforcement in accordance with Table 107.2.

(77) Chapter 18, Section 1801.5 is deleted and substitute the following:

1801.5 Permits. Permits shall be obtained from the Director of Code Enforcement in accordance with Table 107.2.

(78) Chapter 19, Section 1901.2 is deleted and substitute the following:

1901.2 Permits. Permits shall be obtained from the Director of Code Enforcement in accordance with Table 107.2.

(79) Chapter 19, Section 1907 is amended by adding the following:

1907.1.1 Permits. Permits shall be obtained from the Director of Code Enforcement in accordance with Table 107.2.

(80) Chapter 20, Section 2001.2 is deleted and substitute the following:

2001.2 Permits. Permits shall be obtained from the Director of Code Enforcement in accordance with Table 107.2.

(81) Chapter 21, Section 2101.2 is deleted and substitute the following:

2101.2 Permits. Permits shall be obtained from the Director of Code Enforcement in accordance with Table 107.2.

(82) Chapter 22, Section 2201.2 is deleted and substitute the following:

2201.2 Permits. Permits shall be obtained from the Director of Code Enforcement in accordance with Table 107.2.

(83) Chapter 22, Ssection 2204.3.1 is amended to read as follows:

2204.3.1 General. Where approved, unattended self-service stations are allowed where the public does not have access. As a condition of approval, the owner or operator shall provide and be accountable for, daily site visits, regular equipment inspection and yearly maintenance.

(84) Chapter 22, Section 2206.2.3 is amended as follows:

2206.2.3 Above-ground tanks located outside, above grade. Above-ground tanks shall not be used for the storage of Class I, II or IIIA liquid motor fuels except where the public does not have access, and as provided by this section.

(1) Above-ground tanks used for outside, above-grade storage of liquid motor fuels shall be listed and labeled as protected above-ground tanks and be in accordance with Chapter 34. Such tanks shall be located in accordance with Table 2206.2.3.

(2) Above-ground tanks used for above-grade storage of Class II or IIIA liquids shall be protected above-ground tanks that comply with Chapter 34. Tank locations shall be in accordance with Table 2206.2.3. Tanks containing motor fuels shall not exceed 6,000 gallons in individual capacity or 18,000 gallons in aggregate capacity. Installations shall be separated from other such installations by not less than 100 feet (30 480mm).

(3) Tanks located at farms, construction projects or rural areas shall comply with Section 3406.2.

(85) Chapter 23, Section 2301 is amended by adding the following:

2301.2 Permits. Permits shall be obtained from the Director of Code Enforcement in accordance with Table 107.2.

(86) Chapter 24, Section 2401.2 is deleted.

(87) Chapter 24, Section 2403.2 is amended by adding the following:

2403.2 Permits. . Tents and membrane structures having an area in excess of 200 square feet (19 m^2) and canopies in excess of 400 square feet (37 m^2) shall not be erected, operated or maintained for any purpose without first obtaining a permit and approval from the Director of Code Enforcement in accordance with Table 107.2 .

(88) Chapter 24, Section 2403.4 is deleted.

(89) Chapter 25, Section 2501 is deleted and add the following:

2501.2 Permits. Permits shall be obtained from the Director of Code Enforcement in accordance with Table 107.2.

(90) Chapter 25, Section 2503.1.2 is deleted.

(91) Chapter 25, Section 2509.2 and 2509.3 is added:

2509.2 Indoor Storage of Scrap Tires and Tire Byproducts. The storage of scrap tires and tire by products exceeding 2,500 cubic feet (71m^3) shall require a permit.

2509.3 Permits. Permits shall be obtained from the Director of Code Enforcement in accordance with Table 107.2.

(92) Chapter 26, Section 2601.2 is deleted and substitute the following:

2601.2 Permits. Permits shall be obtained from the Director of Code Enforcement in accordance with Table 107.2.

(93) Chapter 26, Section 2604 is amended by adding the following:

2604.2.6.1 Exterior Operations. Areas where welding and cutting carts are moved or relocated out of an approved welding and cutting area, the welding and cutting carts shall be equipped with an approved 2A-20BC fire extinguisher. The fire extinguisher shall be securely mounted to the welding and cutting cart.

(94) Chapter 27, Subsection 2701.1 is amended as follows:

2701.1 - Exceptions 1, 4, and 8, 9 are deleted.

(95) Chapter 27, Section 2701.5 deleted and substitute the following:

2701.5 Permits. Permits shall be obtained from the Director of Code Enforcement in accordance with Table 107.2.

(96) Chapter 28, Subsection 2801.2 is deleted and substitute the following:

2801.2 Permits. Permits shall be obtained from the Director of Code Enforcement in accordance with Table 107.2.

(97) Chapter 29, Section 2901.3 is deleted and substitute the following:

2901.3 Permits. Permits shall be obtained from the Director of Code Enforcement in accordance with Table 107.2.

(98) Chapter 30, Section 3001.2 is deleted and substitute the following:

3001.2 Permits. Permits shall be obtained from the Director of Code Enforcement in accordance with Table 107.2.

(99) Chapter 31, Subsection 3101.2 is deleted and substitute the following:

3101.2 Permits. Permits shall be obtained from the Director of Code Enforcement in accordance with Table 107.2.

(100) Chapter 32, Subsection 3201.2 is deleted and substitute the following:

3201.2 Permits. Permits shall be obtained from the Director of Code Enforcement in accordance with Table 107.2.

(101) Chapter 33, Subsection 3301.1 is deleted and substitute the following:

3301.1 Scope. The equipment, processed and operations involving the manufacture, possession, storage, sale, use, maintenance and transportation of explosive materials shall comply with the requirements of this code, NFPA 495 and DOTn 49 CFP listed in Chapter 45 of this code.

Exceptions:

1. The transportation and use of explosives by federal or state military agencies or federal, state or municipal agencies while engaged in normal or emergency performance of duties.
2. The manufacture and distribution of explosive material to, or storage of such materials by military agencies of the United States.
3. The use of explosive materials in medicines and medicinal agents in the forms prescribed by the U.S. Phamacopeia or the National Formulary.
4. Pyrotechnics such as flares, fuses and railway torpedoes.
5. Common fireworks in accordance with this Chapter 31.
6. The possession, transportation and use of not more than 15 pounds of black powder or 15 pounds r (6.18 kg) 20 pounds of smokeless powder and 1,000 small arms primers for hand loading of small arms ammunition for personal use.
7. The storage, handling, transportation or use of explosives or blasting agents pursuant to provisions of Title 45.1 of the Code of Virginia.

(102) Chapter 33, Section 3301.2 is deleted and substitute the following:

3301.2 Permits. Permits shall be obtained from the Director of Code Enforcement in accordance with Table 107.2 for all blasting operations, firework aerial displays, pyrotechnic events before an audience, the transportation , manufacture, possession, use, storage of explosives and fireworks and the operation of a terminal for handling explosive material and the delivery to or receipt from a carrier at a terminal between sunset and sunrise.

(103) Chapter 33, Section 3301.1.3 delete the following:

Delete exception 1, 2 and 4.

(104) Chapter 33, Section 3302.1. The definition of Fireworks is deleted and replaced with the following:

3302.1 Fireworks. "Fireworks" shall mean and include any combustible or explosive composition, or any substance or combination of substances or articles prepared for the purpose of producing a visible or an audible effect by combustion, explosion, chemical reaction, deflagration or detonation and shall include blank cartridges, toy pistols, toy cannons, toy canes or toy guns in which explosives are used, the type of balloons which require fire underneath to propel them, firecrackers, torpedoes, skyrockets, model rockets, Roman candles, Daygo bombs, sparklers, pinwheels, poppers, or other devices containing any explosive or flammable compound, or any tablets or other devices containing any explosive; except that the term "fireworks" shall not include auto flares, paper caps containing not in excess of an average of twenty-five hundredths of a grain of explosive content per cap manufactured in accordance with the DOT regulations for packing and shipping as provided therein, and toy pistols, toy cannons, toy canes, toy guns or other devices for use of the caps, the sale and use of which shall be permitted at all times. Pyrotechnics (special fireworks) shall comply with the applicable provisions of this Chapter.

(105) Chapter 33, Section 3303.2 is amended by adding the following definition:

3303.2.1 Records. Daily records shall be kept of the amount of explosives received from a supplier and the amount delivered to the magazine. A daily record shall be kept of the amount of explosives removed from the magazine for daily use and the amount returned to the magazine. This record will be kept within the magazine so that, on inspection of the magazine, an inventory for all explosives can be made. The inventory shall be separated as to the different types of explosives stored and used. Forms for these records shall be approved by the Director of Code Enforcement.

(106) Chapter 33, Section 3304.5 is amended by adding the following subsection:

3304.5.2.1 Type 2 magazines: Type 2 magazines may be used for temporary storage of explosives at the site of blasting operations where the amount constitutes not more than one day's supply for use is current operations. All explosives not used in the day's operation shall be returned to a Type 1 magazine at the end of the work day for overnight storage. In no case shall a Type 2 magazine be used for overnight storage unless approved by the Director of Code Enforcement. Type 2 magazines shall be allowed only in the I/Industrial Zone.

(107) Chapter 33, Section 3306.4 is amended by adding the following:

3306.4.1 **Small arms primers and ammunition.** No more than 10,000 small arms primers and ammunition shall be stored in occupancies limited to Groups R-3 <u>and R-5.</u>

(108) Chapter 33, Section 3308.1 is deleted and amended by substituting the following subsections:

3308.1 General.

(a) This chapter shall apply to fireworks as hereinafter defined in 3302.1

(b) Nothing in this chapter shall be construed to prohibit: (i) any resident wholesaler, dealer or jobber to sell at wholesale any fireworks as are not herein prohibited; (ii) the sale of any kind of fireworks, provided they are to be shipped directly out of the state, in accordance with the Department of Transportation (DOT) regulations covering the transportation of explosives and other dangerous articles; (iii) the use of fireworks by railroads or other transportation agencies for signal purposes or illumination; or (iv) the sale or use of blank cartridges for a show or theater or for signal or ceremonial purposes in athletics or sports or fur use by military organizations or the police department. Fireworks permitted by this section shall be stored in accordance with this Chapter:

3308.1.1 Manufacture, sale, possession and discharge of fireworks.

(a) The manufacture of fireworks is prohibited within the city.

(b) It shall be unlawful for any person to store, offer for sale, expose for sale, sell at retail, use, possess, or explode any fireworks except as otherwise provided in subsections (c) through (f)

(c) The Director of Code Enforcement shall adopt rules and regulations for the granting of permits for supervised public displays of fireworks. The permits shall be issued upon application to the Director of Code Enforcement after the filing of a bond by the applicant as provided in subsection 3308.1.2. Every such display shall be handled by an experienced and competent operator approved by the Director of Code Enforcement and shall be of such composition, character and so located, discharged or fired as will, in the opinion of the Director of Code Enforcement after proper inspection, not be dangerous or hazardous to any property or person.

(d) Application for permits shall be made in writing at least 45 days in advance of the date of the display. After the permit had been granted, sale, possession, use and distribution of fireworks for display purposed shall be lawful for the purpose only. No permit granted hereunder shall be transferable. Applications for permit shall be in accordance with the requirements in Appendix C, "Requirements for Fireworks Displays".

(e) The sale, possession, use and distribution of fireworks for display purposes shall be conducted so as to be safe to persons and property. Evidence that the sale, possession, use and distribution of fireworks for display purposes has been conducted in accordance with the applicable provision of this chapter of the city code and the applicable standards contained in chapter 45 of the Virginia Statewide Fire Prevention Code shall be evidence that such sale, possession, use and distribution of fireworks fore display purposed provides safety to persons and property.

(f) The Director of Code Enforcement shall adopt rules and regulation for the use of model rockets. The design, construction and use of model rockets shall be safe to persons and property. Evidence that the design, construction and use of model rockets is in accordance with the currently adopted edition of NFPA 1122, "Code for Model Rocketry", published by the National Fire Protection Association, shall be evidence that any design, construction and use provides safety to persons and property.

3308.1.2 Permits. Permits shall be obtained from the Director of Code Enforcement in accordance with Table 107.2.

3308.1.3 Disposal of unfired fireworks. Any fireworks that remain unfired after the display is concluded shall be immediately disposed of in a manner safe for the particular type of fireworks remaining. Aerial fireworks shall be destroyed in an approved manner prior to removal form mortar tubes.

3308.1.4 Seizure of fireworks. The Director of Code Enforcement or designee shall seize, take, remove or cause to be removed at the expense of the owner, all fireworks offered for sale, stored or held in violation of this code.

(109) Chapter 33, Section 3301.11 is amended to read:

3308.11 Retail display and sale. The retail display or sale of fireworks is prohibited.

(110) Chapter 33, add Section 3309 Transportation as follows:

3309.1 Prohibited transportation. Explosive materials shall not be carried or transported on a public conveyance or vehicle carrying passengers for hire.

3309.2 Vehicle design. Vehicles transporting explosive materials shall be strong enough to carry the load and shall be in good and safe mechanical condition. The floors shall be tight and have no exposed spark producing surface on the inside of the body. Where explosive materials are transported on a vehicle with an open body, the explosive material shall be stored in a portable magazine or closed container securely fastened to the vehicle body.

3309.3 Vehicle prohibitions. The attachment of a trailer behind a truck, tractor of semi trailer combination for transporting explosive materials is prohibited. The transport of explosive materials in any pole trailer is prohibited. Exception: Such transport is permitted by DOTn 49 CFR listed in Chapter 45 of this code.

3309.4 Vehicle restrictions. Vehicles containing explosive materials shall not be taken into a garage or repair shop for repair or storage.

3309.5 Vehicle contents. Only those dangerous articles authorized to be loaded with explosive materials in accordance with the provisions of this chapter shall be carried in the body of a vehicle transporting explosive materials.

3309.6 Vehicle inspections. The person to whom a permit has been issued to transport explosive materials over the streets and highways of the city shall inspect each vehicle used for such purposes daily, to ensure that:

1. Fire extinguishers are filled and in working order.

2. All electrical wiring is completely protected and securely fashioned to prevent short circuiting.

3. The motor, chassis, oil pan and body undersides are reasonably clean and free of excess grease and oil.

4. Both the fuel tank and fuel line are secure and free from leaks.

5. The brakes, lights, windshield wipers, horn and steering mechanism are functioning properly.

6. The tires are property inflated, have proper tread depth and are free of defects.

7. The vehicle is otherwise in proper operating condition and acceptable for transporting explosive materials.

8. The operator shall maintain all inspection reports in vehicle at all times.

3309.6.1 Prior Inspection. Vehicles routinely transporting explosive materials within the city shall be inspected by the Code Official prior to entering the city limits. Inspection shall occur at six month intervals. The Code Official shall issue a fire prevention permit to all approved vehicles.

3309.7 Vehicle signs. Vehicles transporting any quantity of explosive materials shall display all placards, signs lettering or numbering in accordance with DOTn 49 CFR listed in Chapter 45.

3309.8 Separation of detonators and explosives. Detonators shall not be transported in the same vehicle with Class A or Class B explosive materials or blasting agents, except as permitted by DOTn 49 CFR listed in Chapter 44.

3309.9 Vehicle traveling clearances. Vehicles transporting explosive materials and traveling in the same direction shall not be driven within 300 feet (91,440 mm) of each other.

3309.10 Vehicle routing. The route followed by vehicles transporting explosive materials shall not pass through congested areas or heavy traffic, except as permitted by the Code Official. A transportation plan identifying the route of travel shall be submitted to the Code Official for review and approval.

3309.11 Restricted transportation. Explosive materials shall not be transported through any vehicular tunnel or subway or over any bridge, roadway or elevated highway through or over which such transport is prohibited.

3309.12 Portable fire extinguishers. Every vehicle transporting explosive materials shall be equipped with portable fire extinguishers capable of being readily accessed, filled and ready for immediate discharge.

3309.12.1 Small trucks. At least two portable fire extinguishers with a minimum 2-A:40-B:C rating shall be provided on trucks with a gross vehicle weight of 14,000 lbs. (6356 kg) or greater.

3309.13 Operating precautions. No person shall carry matches of any other flame producing device, or carry unauthorized firearms or cartridges while in or near a vehicle transporting or storing explosive materials. No person shall drive, load or unload such a vehicle in a careless or reckless manner.

3309.14. Spark protection. Spark producing metal or tools, oils, matches, firearms, electric storage batteries, flammable materials, acids, oxidizers or corrosives shall not be transported or stored in the body of any vehicle being used to store or transport explosive materials or blasting agents.

3309.15 Unattended vehicles. Vehicles being used to store or transport explosive materials shall not be left unattended at any time within the city. No unauthorized person shall ride or be permitted to ride on any such vehicle.

3309.15.1 Responsibilities. The authorized vehicle attendant shall remain awake and alert at all times.

3309.16 Vehicle parking and transfer. Vehicles being used to transport explosive materials shall not be parked, attended or unattended on any street or road withing the city or adjacent to or in proximity to any building or structure, including a bridge or tunnel. or other place where persons work, congregate or assemble, prior to reaching the vehicles' destination. Explosive materials shall not be transferred from one vehicle to another except in an emergency and under the supervision of the Director of Code Enforcement.

3309.16.1 Emergency conditions. In the event a vehicle being used to transport explosive materials breaks down, is involved in an accident or catches on fire, the city police and fire department shall be notified immediately. Only in the event of a breakdown or accident shall explosive materials be transferred from the disabled vehicle to another and then only by proper and qualified personnel and under the supervision of the Director of Code Enforcement.

3308.17 Delivery. Delivery of explosive materials shall only be made to authorized persons and into approved magazines or approved temporary storage or handling areas.

3309.18 Explosive materials at terminals. The Code Official shall designate the location and specify the maximum quantity of explosive materials which are to be loaded, unloaded, reloaded or stored at any given time at each terminal where such operations are permitted.

3309.19 Carrier responsibility. A carrier shall immediately notify the Code Official when explosive materials or blasting agents are to be transported within the City.

3309.20 Notice to consignee. A carrier shall immediately notify the consignee of the arrival of explosive materials at the carrier's terminal.

3309.21 Consignee responsibility. Upon notification that a shipment of explosive materials has arrived at a terminal, the consignee shall remove such materials to a storage area complying with the provisions of this chapter. Such removal shall be accomplished within 48 hours after receipt of notice, excluding Saturdays, Sundays and legal holidays.

(111) Chapter 34, Section 3401.4 is deleted and substitute the following:

3401.4 Permits. Permits shall be obtained from the Director of Code Enforcement in accordance with Table 107.2.

(112) Chapter 34, Section 3404 is amended by adding the following subsections:

3404.2.7.12 Spill prevention plan. The owner or operator of any storage facility comprised of one or more tanks above or below ground with a total capacity of 5,000 gallons or more shall prepare and maintain on site a plan for product spill prevention, control and countermeasures certified by a professional engineer registered in the Commonwealth of Virginia and approve by the Director of Code Enforcement. The certification of the professional engineer shall be that the plan is in substantial compliance with the spill prevention, control and countermeasures plan requirements of the Environmental Protection Agency contained in part 112 of title 40, Code of Federal Regulations. A plan that has been approved by the Environmental Protection Agency may be submitted to the Director of Code Enforcement in lieu of one certified by a professional engineer.

3404.2.7.13 Clean-up of spill and leaks. The owner, tenant or other person in control of premises where a spill of leak has occurred shall be responsible for taking immediate and effective countermeasures to contain the spill, clean up the flammable or combustible liquid and dispose of all waste in an approved manner. Upon notification by the city that is has determined that such person lacks the capability or intent to perform these countermeasures, the person notified shall have a reasonable opportunity to elect either to contract with another for the performance of these countermeasures or to join the city in a contract with another for such work. In either case, the person shall pay the entire cost of the work. If a person who has received a notice from the city under this section fails to inform the city of his election within the time specified in the notice, the city may proceed without delay to undertake the required countermeasures, and to charge the owner, tenant or other person in control of the premises the entire cost of such work.

3404.2.7.14 Monitoring wells. Two permanent monitoring wells shall be installed in opposing corners of the tank field on all new installation after the effective date of this regulation. These wells shall extend to a minimum depth of two feet below the bottom of the tanks in the tank field. These wells shall be a minimum of four inches schedule 40 PVC screen pipe or equivalent and shall be flush with covering surface and covered with standard metal cover and gravel packed to prevent clogging. The screened section shall have a minimum size of .025 inch.

3404.2.7.15 Tank closure. All underground storage tanks permanently removed from service shall have a site assessment in accordance with the regulation of the Virginia Statewide Water Control Board. A copy of this assessment must be submitted to the Fire Official and to the Virginia Water Control Board if it so requires. A minimum of three soil samplings should be obtained to complete this assessment. Previously used tanks which are removed from the ground shall not be reinstalled unless the original manufacturer certifies that they are suitable for service. The manufacturers written certification must be kept on file at the facility and be available for inspection by the Director of Code Enforcement.

3404.2.7.16 Product inventory. All buried tanks installed after this regulation is effective shall have provision for taking direct measurements of readings of content level by the stick method. Liquid levels of storage tanks shall be measured by the operator each day of operation and compared with pump meter readings taken on receipt of the product. These records shall be kept in a log book and be available for reasonable inspection by the Director of Code Enforcement and/or his representative. Loss of product above normal evaporation (one-half of one percent of pump meter sales readings) shall be reported immediately to the Director of Code Enforcement. Records shall be retained for two years. This period shall be extended upon request of the Director of Code Enforcement.

3404.2.7.17 Special equipment. High liquid level gauges or alarm systems as well as pump cut-off devices shall be installed by the owner or the authorized operator in all oil storage tanks wherever in the judgement of the Director of Code Enforcement there is a possibility that product may be lost by overflowing. Since these emergency devices can fail to operate, their use for spill prevention purposes shall be considered only as auxiliary and supplementary to the use of personnel engaged in a transfer of fill operation.

(113) Chapter 34, Section 3406 is amended by adding the following subsection:

3406.6.5 Maintenance. Tank vehicles operating within the city while in transit into or out of the city shall be maintained in accordance with the federal regulations contained in parts 390 through 397 of title 49, Code of Federal Regulations. Part 397.3 of Title 49 requires that all motor vehicles carrying hazardous materials comply with state and local laws, ordinances and regulations, unless the regulations of the U.S. Department of Transportation apply and are more strict. Pursuant to the authority granted in section 18.2-278.4 of the Code of Virginia (1950), as amended, any duly sworn law enforcement officer of the city, including the Chief Fire Marshal, Chief Deputy Fire Marshal, and any Deputy Fire Marshals may halt any tank vehicle which is observed to have a condition or characteristic which indicates that there is a violation of city, state or federal regulations governing the transportation of hazardous materials. The vehicle may be detained long enough to determine whether the permits required for transporting hazardous materials have been obtained, whether the cargo is secure, and whether the observed condition or characteristic presents a immediate threat of a transportation related spill or other catastrophic event. The tank vehicle may resume operation if it is found to be in good repair and free of leaks in accordance with NFPA 385. If that finding is not made, the vehicle shall not be detained any longer than necessary for the officer or official to determine that arrangements for the repair of the vehicle where situated of for its removal to a safe place and repair there, whichever in the judgement of the officer or official if appropriate, are made. Upon refusal of the operator to make arrangements required by the officer or official, the vehicle shall be impounded and held until the repair is made or until the officer or official is certain that it will be made.
(Ord. No. 4243, 3/16/02, Sec.1)

(114) Chapter 35, Section 3501.2 is deleted and substitute the following:

3501.2 Permits. Permits shall be obtained from the Director of Code Enforcement in accordance with Table 107.2.

(115) Chapter 36, Section 3601.2 is deleted and substitute the following:

3601.2 Permits. Permits shall be obtained from the Director of Code Enforcement in accordance with Table 107.2.

(116) Chapter 36, Section 3606.2 is amended by adding the following section:

3606.1.2 Permits. Permits shall be obtained from the Director of Code Enforcement in accordance with Table 107.2.

(117) Chapter 37, section 3701.2 is deleted and substitute the following:

3701.2 Permits. Permits shall be obtained from the Director of Code Enforcement in accordance with Table 107.2.

(118) Chapter 38, section 3801.2 is amended as follows:

3801.2 Permits. Permits shall be obtained from the Director of Code Enforcement in accordance with Table 107.2.

(119) Chapter 38, section 3803.2.2.1 is amended by adding the following subsection:

3803.2.2.1 Permits. Permits shall be obtained from the Director of Code Enforcement in accordance with Table 107.2 for the storage and operation of industrial vehicles and floor maintenance machines.

(120) Chapter 39, section 3902.1 is deleted and substitute the following:

3901.2 Permits. Permits shall be obtained from the Director of Code Enforcement in accordance with Table 107.2.

(121) Chapter 40, section 4001.2 is deleted and substitute the following:

4001.2 Permits. Permits shall be obtained from the Director of Code Enforcement in accordance with Table 107.2.

(122) Chapter 41, section 4101.2 is deleted and substitute the following:

4101.2 Permits. Permits shall be obtained from the Director of Code Enforcement in accordance with Table 107.2.

(123) Chapter 42, section 4201.2 is deleted and substitute the following:

4201.2 Permits. Permits shall be obtained from the Director of Code Enforcement in accordance with Table 107.2.

(124) Chapter 43, section 4301.2 is deleted and substitute the following:

4301.2 Permits. Permits shall be obtained from the Director of Code Enforcement in accordance with Table 107.2.

(125) Chapter 44, section 4401.2 is deleted and substitute the following:

4401.2 Permits. Permits shall be obtained from the Director of Code Enforcement in accordance with Table 107.2.

Section 2. That this ordinance shall become effective upon the date and at the time of its final passage.

WILLIAM D. EUILLE
Mayor

Final Passage: June 17, 2006

H:\CLERK\ORD06\4455.wpd