BAR Case # 2012-0036

ADDRESS OF PROJECT: 601 King Street

TAX MAP AND PARCEL: 74-02-03-15 **ZONING:** _____

APPLICATION FOR: *(Please check all that apply)*

☑ CERTIFICATE OF APPROPRIATENESS

☐ PERMIT TO MOVE, REMOVE, ENCAPSULATE OR DEMOLISH
(Required if more than 25 square feet of a structure is to be demolished/impacted)

☐ WAIVER OF VISION CLEARANCE REQUIREMENT and/or YARD REQUIREMENTS IN A VISION CLEARANCE AREA (Section 7-802, Alexandria 1992 Zoning Ordinance)

☐ WAIVER OF ROOFTOP HVAC SCREENING REQUIREMENT
(Section 6-403(B)(3), Alexandria 1992 Zoning Ordinance)

Applicant: ☐ Property Owner ☑ Business *(Please provide business name & contact person)*

Name: AMY LANCASTER · ATLAS DISTRICT DESIGN

Address: 700 12th ST NE

City: WASHINGTON State: DC Zip: 20002

Phone: 202·494 6157 E-mail: amy@atlasdistrictdesign.com

Authorized Agent *(if applicable)*: ☐ Attorney ☑ Architect ☐ _____

Name: SEE ABOVE Phone: _____

E-mail: _____

Legal Property Owner:

Name: 601 King Street Investors, LLC c/o JCR Companies

Address: 601 King St,

City: Alexandria State: VA Zip: 22314

Phone: 202·270·2493 E-mail: joe.reger@jcrcompanies.com

☐ **Yes** ☑ **No** Is there an historic preservation easement on this property?
☐ **Yes** ☐ **No** If yes, has the easement holder agreed to the proposed alterations?
☐ **Yes** ☑ **No** Is there a homeowner's association for this property?
☐ **Yes** ☐ **No** If yes, has the homeowner's association approved the proposed alterations?

If you answered yes to any of the above, please attach a copy of the letter approving the project.

BAR Case # 2012-00340

NATURE OF PROPOSED WORK: *Please check all that apply*

- [ ] NEW CONSTRUCTION
- [x] EXTERIOR ALTERATION: *Please check all that apply.*
  - [x] awning
  - [ ] fence, gate or garden wall
  - [ ] HVAC equipment
  - [ ] shutters
  - [ ] doors
  - [x] windows
  - [ ] siding
  - [ ] shed
  - [x] lighting
  - [ ] pergola/trellis
  - [ ] painting unpainted masonry
  - [ ] other _____
- [ ] ADDITION
- [ ] DEMOLITION/ENCAPSULATION
- [x] SIGNAGE

DESCRIPTION OF PROPOSED WORK: *Please describe the proposed work in detail (Additional pages may be attached).*

- NEW ENLARED SHED-STYLE AWNING @ N. ST ASAPH ENTRANCE (QTY: 1)
- NEW EXTERIOR LIGHT FIXTURES @ N. ST ASAPH ENTRANCE (QTY: 2)

- NEW 13"x20" BRASS PLAQUE @ N. ST ASAPH ENTRANCE (QTY: 1)
- NEW 11"x11" BRASS PLAQUE @ KING STREET FACADE (QTY: 1)
  - NOTE: UNDER ONE SQUARE FOOT

- COMPLETE WINDOW REPLACEMENT USING ALUMINUM CLAD WOOD TWO OVER TWO WINDOWS w/ 7/8" mullion and LOWE glass.

NOTE: Final manufacturer selection pending feedback from ALEXANDRIA BAR.

SUBMITTAL REQUIREMENTS:

Items listed below comprise the **minimum supporting materials** for BAR applications. Staff may request additional information during application review. Please refer to the relevant section of the *Design Guidelines* for further information on appropriate treatments.

Applicants must use the checklist below to ensure the application is complete. Include all information and material that are necessary to thoroughly describe the project. Incomplete applications will delay the docketing of the application for review. Pre-application meetings are required for all proposed additions. All applicants are encouraged to meet with staff prior to submission of a completed application.

Electronic copies of submission materials should be submitted whenever possible.

Demolition/Encapsulation : *All applicants requesting 25 square feet or more of demolition/encapsulation must complete this section. Check N/A if an item in this section does not apply to your project.*

	N/A	
[ ]	[ ]	Survey plat showing the extent of the proposed demolition/encapsulation.
[ ]	[ ]	Existing elevation drawings clearly showing all elements proposed for demolition/encapsulation.
[ ]	[ ]	Clear and labeled photographs of all elevations of the building if the entire structure is proposed to be demolished.
[ ]	[ ]	Description of the reason for demolition/encapsulation.
[ ]	[ ]	Description of the alternatives to demolition/encapsulation and why such alternatives are not considered feasible.

BAR Case # 2012-0036

Additions & New Construction: *Drawings must be to scale and should not exceed 11" x 17" unless approved by staff. All plans must be folded and collated into 12 complete 8 1/2" x 11" sets. Additional copies may be requested by staff for large-scale development projects or projects fronting Washington Street. Check N/A if an item in this section does not apply to your project.*

N/A

- ☑ ☐ Scaled survey plat showing dimensions of lot and location of existing building and other structures on the lot, location of proposed structure or addition, dimensions of existing structure(s), proposed addition or new construction, and all exterior, ground and roof mounted equipment.
- ☐ ☑ FAR & Open Space calculation form.
- ☑ ☐ Clear and labeled photographs of the site, surrounding properties and existing structures, if applicable.
- ☑ ☐ Existing elevations must be scaled and include dimensions.
- ☑ ☐ Proposed elevations must be scaled and include dimensions. Include the relationship to adjacent structures in plan and elevations.
- ☑ ☐ Materials and colors to be used must be specified and delineated on the drawings. Actual samples may be provided or required.
- ☑ ☐ Manufacturer's specifications for materials to include, but not limited to: roofing, siding, windows, doors, lighting, fencing, HVAC equipment and walls.
- ☐ ☑ For development site plan projects, a model showing mass relationships to adjacent properties and structures.

Signs & Awnings: *One sign per building under one square foot does not require BAR approval unless illuminated. All other signs including window signs require BAR approval. Check N/A if an item in this section does not apply to your project.*

N/A

- ☑ ☐ Linear feet of building: Front: _____ Secondary front (if corner lot): _____.
- ☐ ☑ Square feet of existing signs to remain: n/a.
- ☑ ☐ Photograph of building showing existing conditions.
- ☑ ☐ Dimensioned drawings of proposed sign identifying materials, color, lettering style and text.
- ☑ ☐ Location of sign (show exact location on building including the height above sidewalk). Height above sidewalk shall remain the same as existing.
- ☑ ☐ Means of attachment (drawing or manufacturer's cut sheet of bracket if applicable).
- ☑ ☐ Description of lighting (if applicable). Include manufacturer's cut sheet for any new lighting fixtures and information detailing how it will be attached to the building's facade.

Alterations: *Check N/A if an item in this section does not apply to your project.*

N/A

- ☑ ☐ Clear and labeled photographs of the site, especially the area being impacted by the alterations, all sides of the building and any pertinent details.
- ☑ ☐ Manufacturer's specifications for materials to include, but not limited to: roofing, siding, windows, doors, lighting, fencing, HVAC equipment and walls.
- ☑ ☐ Drawings accurately representing the changes to the proposed structure, including materials and overall dimensions. Drawings must be to scale.
- ☐ ☑ An official survey plat showing the proposed locations of HVAC units, fences, and sheds.
- ☑ ☐ Historic elevations or photographs should accompany any request to return a structure to an earlier appearance.

BAR Case # 2012-0036

ALL APPLICATIONS: *Please read and check that you have read and understand the following items:*

- [x] I have submitted a filing fee with this application. (Checks should be made payable to the City of Alexandria. Please contact staff for assistance in determining the appropriate fee.)
- [x] I understand the notice requirements and will return a copy of the three respective notice forms to BAR staff at least five days prior to the hearing. If I am unsure to whom I should send notice I will contact Planning and Zoning staff for assistance in identifying adjacent parcels.
- [x] I, the applicant, or an authorized representative will be present at the public hearing.
- [x] I understand that any revisions to this initial application submission (including applications deferred for restudy) must be accompanied by the BAR Supplemental form and 12 sets of revised materials.

The undersigned hereby attests that all of the information herein provided including the site plan, building elevations, prospective drawings of the project, and written descriptive information are true, correct and accurate. The undersigned further understands that, should such information be found incorrect, any action taken by the Board based on such information may be invalidated. The undersigned also hereby grants the City of Alexandria permission to post placard notice as required by Article XI, Division A, Section 11-301(B) of the 1992 Alexandria City Zoning Ordinance, on the property which is the subject of this application. The undersigned also hereby authorizes the City staff and members of the BAR to inspect this site as necessary in the course of research and evaluating the application. The applicant, if other than the property owner, also attests that he/she has obtained permission from the property owner to make this application.

APPLICANT OR AUTHORIZED AGENT:

Signature: A Lancaster

Printed Name: Amy Lancaster

Date: 2/6/2012

OWNERSHIP AND DISCLOSURE STATEMENT
Use additional sheets if necessary

1. Applicant. State the name, address and percent of ownership of any person or entity owning an interest in the applicant, unless the entity is a corporation or partnership, in which case identify each owner of more than ten percent. The term ownership interest shall include any legal or equitable interest held at the time of the application in the real property which is the subject of the application.

Name	Address	Percent of Ownership
1. JOSEPH REGER 601 KING ST MANAGER LLC	601 King St Alexandria VA 22314	65 %
2. JAMES WATERS FIRST FINANCIAL HOLDING	2725 Washington Blvd ARLINGTON VA 22201	23.21 %
3. JOHN ARMSTRONG	P.O. BOX 565 MERRIFIELD VA 22116	14.29 %

2. Property. State the name, address and percent of ownership of any person or entity owning an interest in the property located at _____(address), unless the entity is a corporation or partnership, in which case identify each owner of more than ten percent. The term ownership interest shall include any legal or equitable interest held at the time of the application in the real property which is the subject of the application.

Name	Address	Percent of Ownership
1. JOSEPH REGER 601 KING STREET MANAGER LLC	601 King St Alexandria VA 22314	65 %
2. JAMES WATERS FIRST FINANCIAL HOLDING	2725 Washington Blvd ARLINGTON VA 22201	23.21 %
3. JOHN ARMSTRONG	P.O. BOX 565 MERRIFIELD VA 22116	14.29 %

3. Business or Financial Relationships. Each person or entity listed above (1 and 2), with an ownership interest in the applicant or in the subject property is required to disclose **any** business or financial relationship, as defined by Section 11-350 of the Zoning Ordinance, existing at the time of this application, or within the12-month period prior to the submission of this application with any member of the Alexandria City Council, Planning Commission, Board of Zoning Appeals or either Boards of Architectural Review.

Name of person or entity	Relationship as defined by Section 11-350 of the Zoning Ordinance	Member of the Approving Body (i.e. City Council, Planning Commission, etc.)
1. none		
2.		
3.		

NOTE: Business or financial relationships of the type described in Sec. 11-350 that arise after the filing of this application and before each public hearing must be disclosed prior to the public hearings.

As the applicant or the applicant's authorized agent, I hereby attest to the best of my ability that the information provided above is true and correct.

2/6/2012 AMY LANCASTER A Lancaster
Date Printed Name Signature

601 KING STREET
J. MUIR BLDG.

Application to Board of Architecture Review
Supporting Materials
601 King Street
Alexandria, VA 22314

Table of Contents:

Proposed Scope of work on this project includes a new awning, new exterior signage, new exterior lighting, and complete window replacement. The supporting materials have been broken down in accordance with the Board of Architectural Review Instructions into Signs and Awnings, and Alterations

I. History and Location of Building

II. Signs and Awnings:

A. **Photograph of building showing existing conditions**
1. South Facade - King Street
2. East Facade - North St. Asaph
3. North Facade - Alley / Back of Building

B. **Dimensioned drawings of Proposed Awning / Signs**
1. Awning at North St. Asaph - New shed style awning
2. Brass sign at North St. Asaph 20" x 13"
3. Brass sign at King Street - 11" x 11" (under 1 sq. ft.)

C. Location of Proposed Awning / Signs
1. Awning at North St. Asaph - New shed style awning
2. Brass sign at North St. Asaph 20" x 13"
3. Brass sign at King Street - 11" x 11" (under 1 sq. ft.)

D. Means of Attachment
1. Awning :
   a. Construction Detail for Attachment clip and Z-Bracket
   b. Attachment Clip cutsheet
   c. Z-Bracket cutsheet
2. Brass Sign Large & Small
   a. Blind Stud mount detail

E. Description of Lighting
1. Exterior Wall Sconces :
   a. Manufacturer's cutsheets - Options 1 and 2

II. Alterations

A. **Photographs of Site**
1. South Facade - King Street
2. East Facade - North St. Asaph
3. North Facade - Alley / Back of Building

B. **Window Manufacturer's Specifications / Cutsheets**
1. Trimline Legends Custom Clad Wood Replacement Windows DR 200/E200 Package

C. Scale Drawing of Window, Typ
1. Scale Drawing of Existing Conditions
2. Scale Drawing of Window, Typ

D. Historic Photographs

I. History and Location of Building

The J. Muir Building is located at the corner of King and North Saint Asaph Streets in Alexandria, Virginia.

Originally the site of the Indian Queen Tavern, the current structure was not completed until the 1860's (but may include some portions of the Indian Queen foundation or walls) as part of an ambitious expansion by a propsperous local cabinetry and millwork family business, Muir and Brothers. John Muir settled in Alexandria in 1755 as a talented cabinet maker from Scotland. He built a successful cabinetry and furniture making business, spurred on by the demand for goods created by the Revolutionary War . The War created great prosperity for the artisan and merchant class in Alexandria, which thrived on wartime manufacturing and supplies. Muir's workshop gradually spread from his headquarters on Royal Street to the surrounding blocks. He eventually owned five buildings and leased other properties for various ventures. His sons William and J(ames) Muir completed the current building in the 1860's, after their father's death, as a new showroom for the fine furniture built out of a large two story shed at the rear. They continued the business for many more years. By the 1920's, the ownership passed on from their family. However, the building remained a furniture showroom / warehouse until the early twentieth century, when it was reborn as a shared office space, hosting a mix of lawyers, accountants and other professionals as it does today.

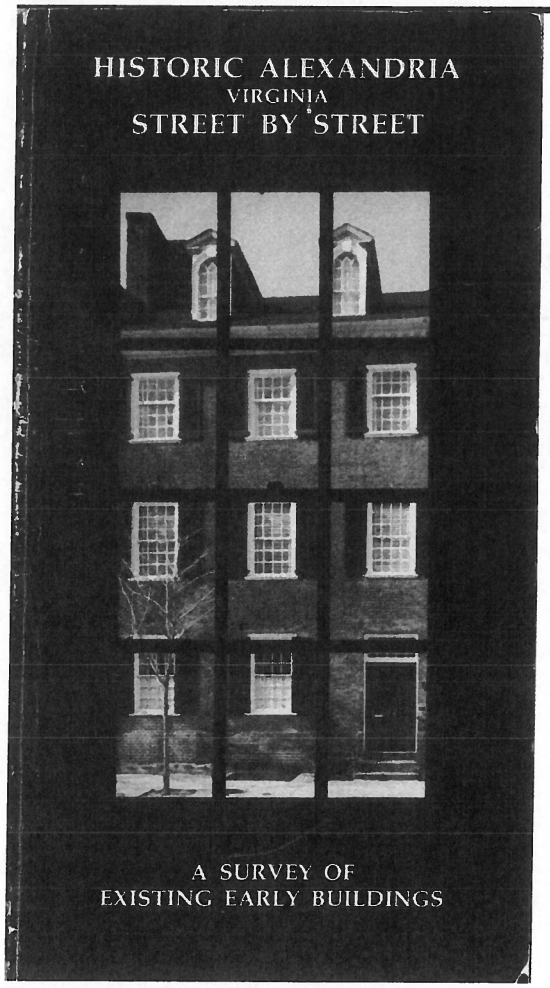

KING

The 300, 400 and 500 blocks were cleared in the 1960's for urban renewal. By that time brick buildings, dating from the early, mid and late 19th C. had replaced the earliest buildings, most of frame. On the north side of the 300 block were the Alexandria National Bank, the *Alexandria Gazette*, and the hardware store of Worth Hulfish. On the southwest corner with Royal was an 1829 brick building on the site of an earlier frame, said to have been the office of George Mason of Gunston Hall. Across the street, on the northwest corner with Royal, a brick building had replaced the early frame tavern of William McKnight. The first structure on the southeast corner with Pitt was a three-story brick built by John Dundas around 1785, and successively, the Washington Tavern, the Franklin House and the Marshall House. When Federal troops occupied Alexandria on May 24, 1861, Colonel Ellsworth of the New York Zouaves removed the Confederate flag flying over the Marshall House, and was shot dead by the proprietor, James Jackson, who was instantly killed by a soldier accompanying Ellsworth. This early building burned in 1872. Toward the center of the north side of the 500 block, concealed by an 1886 front, was the early 19th C. classic revival built for the Mechanics' Bank. On the south side of the 500 block were several early 19th C. buildings. One was occupied by Shuman's Bakery, for many years a popular luncheon and meeting place of downtown merchants and local officials.

629. Amos Alexander, mayor from February 1800 to February 1801, neatly "turned the corner" when he built this house on a lot he bought in 1799. Purchased in 1807 by Robert Young, who was Brigadier General in the District of Columbia militia during the War of 1812, President of the Mechanics' Bank, and Judge of the Orphans' Court of Alexandria. He met with financial reverses in 1817. In his will he called the loss of his money "trifling compared to the venom of evil toungs (sic) proceeding from bad hearts."

Also, 601, incorporating old brick walls, on the site of the late 18th C. Indian Queen Tavern.

Also, 713, brick, 3 stories, gable roof, early 19th C. major alterations; 717, brick, 3 stories, gable roof, early 19th century

68

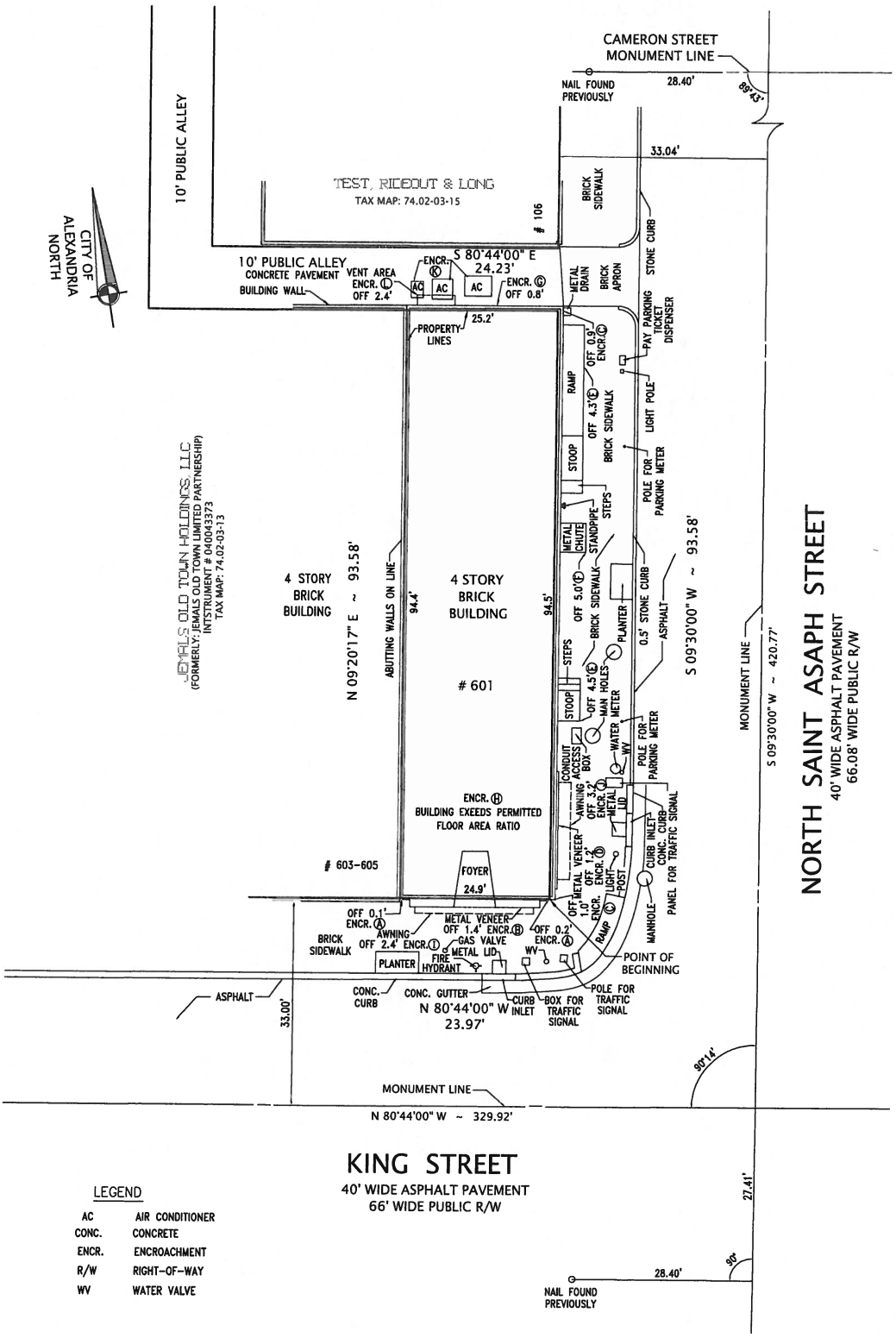
CAMERON STREET
MONUMENT LINE
NAIL FOUND PREVIOUSLY
28.40'
89°43'
33.04'
10' PUBLIC ALLEY
TEST, RIDEOUT & LONG
TAX MAP: 74.02-03-15
106
BRICK SIDEWALK
STONE CURB
CITY OF ALEXANDRIA NORTH
10' PUBLIC ALLEY
CONCRETE PAVEMENT
BUILDING WALL
VENT AREA
ENCR. L OFF 2.4'
ENCR. K
S 80°44'00" E
24.23'
AC
ENCR. G OFF 0.8'
METAL DRAIN
BRICK APRON
PAY PARKING TICKET DISPENSER
25.2'
PROPERTY LINES
OFF 0.9' ENCR. C
RAMP
OFF 4.3' E
BRICK SIDEWALK
LIGHT POLE
STOOP
POLE FOR PARKING METER
STEPS
METAL CHUTE
STANDPIPE
JEMALS OLD TOWN HOLDINGS, LLC
(FORMERLY: JEMALS OLD TOWN LIMITED PARTNERSHIP)
INTSTRUMENT # 040043373
TAX MAP: 74.02-03-13
4 STORY BRICK BUILDING
N 09°20'17" E ~ 93.58'
ABUTTING WALLS ON LINE
94.4'
4 STORY BRICK BUILDING
94.5'
601
OFF 5.0' E
BRICK SIDEWALK
PLANTER
0.5' STONE CURB
ASPHALT
S 09°30'00" W ~ 93.58'
STEPS
OFF 4.5' E
MAN HOLES
STOOP
WATER METER
WV
POLE FOR PARKING METER
CONDUIT ACCESS BOX
AWNING
OFF 3.2' ENCR. J
METAL LID
ENCR. H
BUILDING EXEEDS PERMITTED FLOOR AREA RATIO
CURB INLET
CONC. CURB
PANEL FOR TRAFFIC SIGNAL
603-605
FOYER
24.9'
OFF 1.0' METAL VENEER
OFF 1.2' ENCR. D
LIGHT POST
RAMP C
MANHOLE
OFF 0.1' ENCR. A
AWNING
OFF 2.4' ENCR. I
METAL VENEER
OFF 1.4' ENCR. B
GAS VALVE
METAL LID
OFF 0.2' ENCR. A
WV
BRICK SIDEWALK
PLANTER
FIRE HYDRANT
POINT OF BEGINNING
ASPHALT
CONC. CURB
CONC. GUTTER
N 80°44'00" W
23.97'
CURB INLET
BOX FOR TRAFFIC SIGNAL
POLE FOR TRAFFIC SIGNAL
33.00'
MONUMENT LINE
N 80°44'00" W ~ 329.92'
90°14'
27.41'
90°
28.40'
NAIL FOUND PREVIOUSLY
NORTH SAINT ASAPH STREET
40' WIDE ASPHALT PAVEMENT
66.08' WIDE PUBLIC R/W
MONUMENT LINE
S 09°30'00" W ~ 420.77'
KING STREET
40' WIDE ASPHALT PAVEMENT
66' WIDE PUBLIC R/W
LEGEND
AC AIR CONDITIONER
CONC. CONCRETE
ENCR. ENCROACHMENT
R/W RIGHT-OF-WAY
WV WATER VALVE

Photograph of Existing Conditions

Elevation of South Facade / King Street

Photograph of Existing Conditions

Elevation of East Facade / North St. Asaph Street + North Facade on alley

Photograph of 601 King Street, 1924
Source photograph for proposed window style
Alexandria Library Special Collections

Photograph of 601 King Street, 1965
Current window style in building
Alexandria Library Special Collections

Photograph of Existing Awning

Proposed New Facade

Photograph of Existing signs

Proposed New Signage

Proposed New King Street sign: 11" x 11"

Proposed New King Street sign: 11" x 11" x 0.25" thick etched natural satin brass plaque. Recessed black copy. Two lines of text in Trajan Pro. Single sided. Square corners and edges (no beveling). Blind stud mount back, in-line for brick. Mounting pattern included.

Proposed New North St. Asaph sign: 20" x 13"

Proposed New North St. Asaph sign: 12" x 13" x 0.25" thick etched natural satin brass plaque. Recessed black copy. Two lines of text in Trajan Pro. Inset recessed border, also in black. Single sided. Square corners and edges (no beveling). Blind stud mount back, in-line for brick.

601 King Street

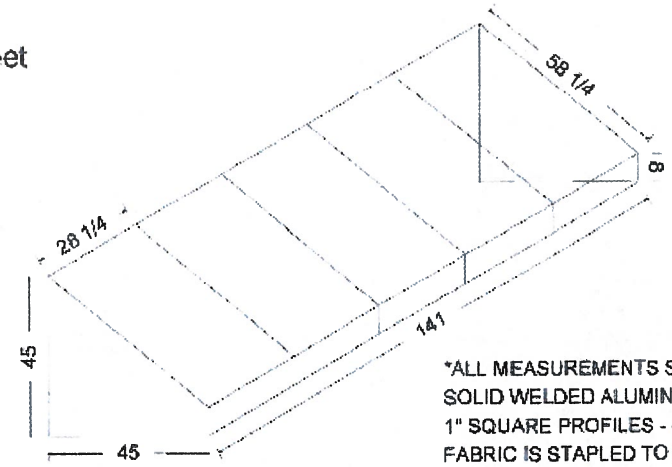

*ALL MEASUREMENTS SHOWN IN INCHES
SOLID WELDED ALUMINUM FRAMES
1" SQUARE PROFILES - MILL FINISH
FABRIC IS STAPLED TO FRAME
10 YEAR WARRANTY ON FRAMES
10 YEAR WARRANTY ON SUNBRELLA FABRIC
MEETS ALL VCC SPECS. FOR WIND/SNOW LOADS

sunbrella

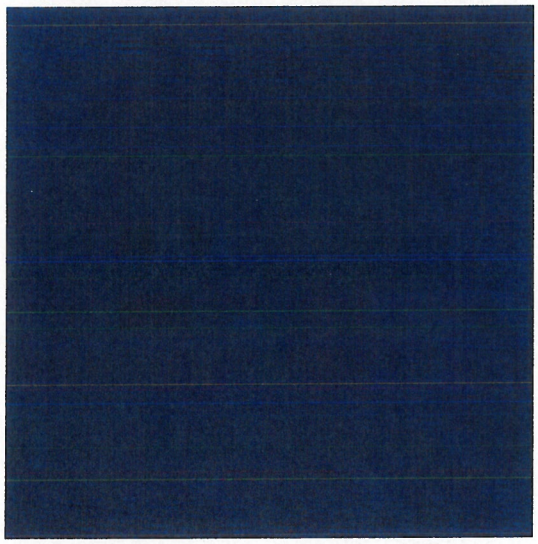

60" Captain Navy
6046-0000

WIDTH: 60" / 152.40 cm
REPEAT: n/a
CONTENT: 100% Sunbrella® acrylic

SELVEDGE POSITION: Left / Right

RECOMMENDED USES:
Awning / Marine exterior

OTHER WIDTHS/FINISHES:
4046-0000 - 46" Captain Navy
0146-0000 - 60" Captain Navy Plus
06046-0000 - 60" Captain Navy
04046-0000 - 46" Captain Navy Plus

SWATCH SIZE SHOWN ~ 5" x 5"

CARE AND CLEANING:
Brush off loose dirt. Wash with a mild soap and lukewarm water solution. Rinse thoroughly. Allow to air dry. For more information visit www.sunbrella.com/cleaning

WARRANTY:
For more information visit www.sunbrella.com/warranty

WALL DETAIL - AWNINGS

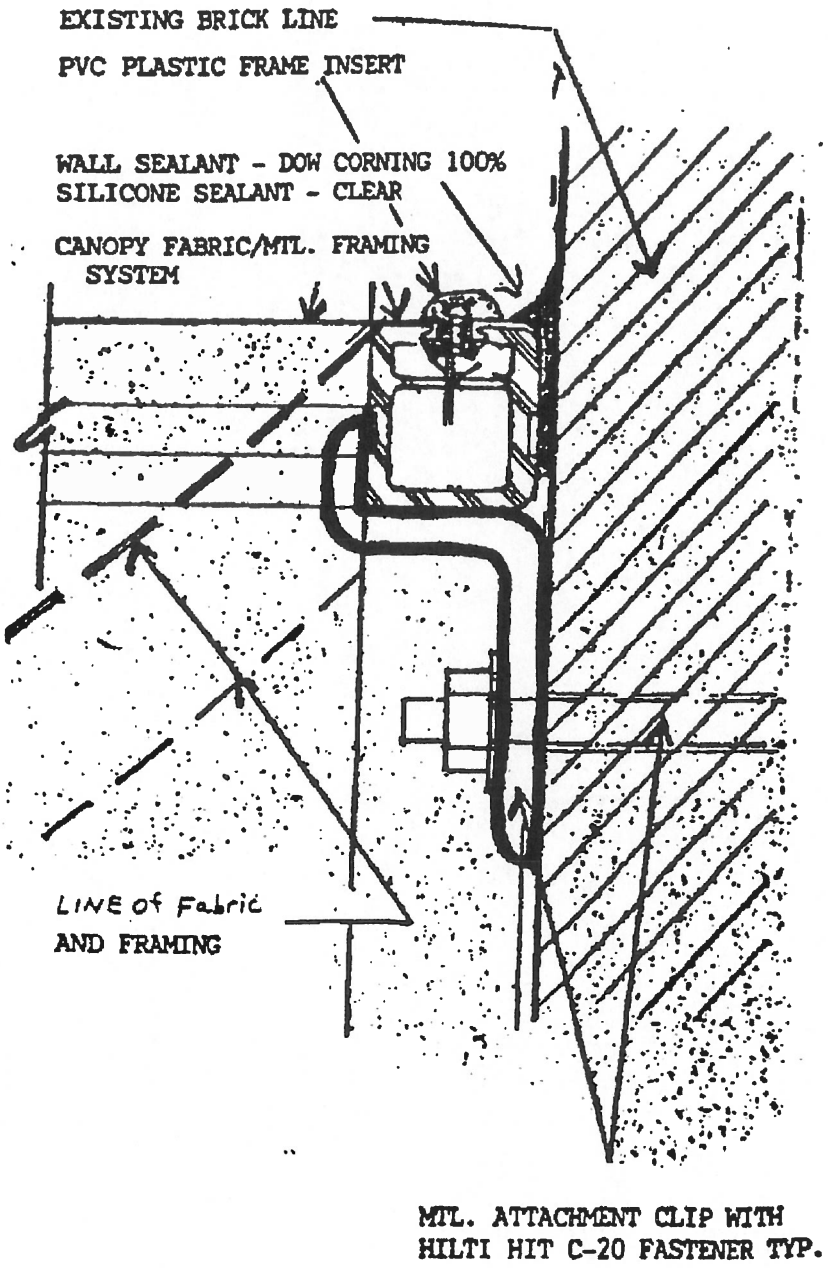

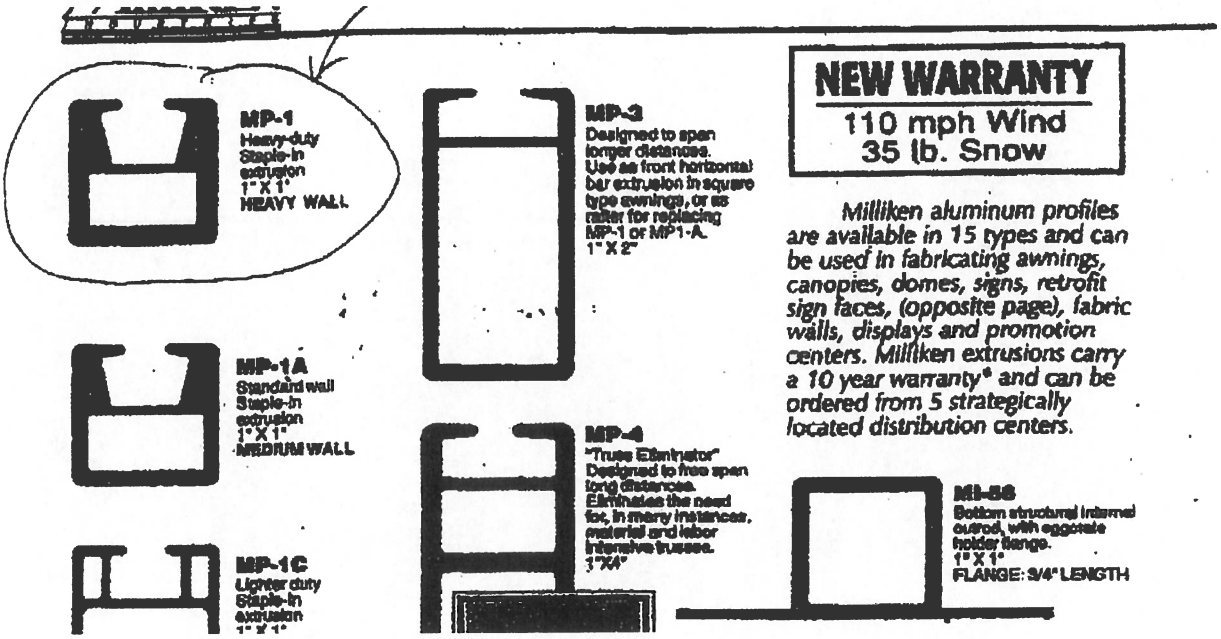
MP-1
Heavy-duty Staple-In extrusion
1" X 1"
HEAVY WALL
MP-1A
Standard wall Staple-In extrusion
1" X 1"
MEDIUM WALL
MP-1C
Lighter duty Staple-In extrusion
MP-3
Designed to span longer distances. Use as front horizontal bar extrusion in square type awnings, or as rafter for replacing MP-1 or MP1-A.
1" X 2"
MP-4
"Truss Eliminator" Designed to free span long distances. Eliminates the need for, in many instances, material and labor intensive trusses.
1"X4"
NEW WARRANTY
110 mph Wind
35 lb. Snow
Milliken aluminum profiles are available in 15 types and can be used in fabricating awnings, canopies, domes, signs, retrofit sign faces, (opposite page), fabric walls, displays and promotion centers. Milliken extrusions carry a 10 year warranty* and can be ordered from 5 strategically located distribution centers.
Bottom structural internal ovaroid, with aggregate holder flange.
1" X 1"
FLANGE: 3/4" LENGTH

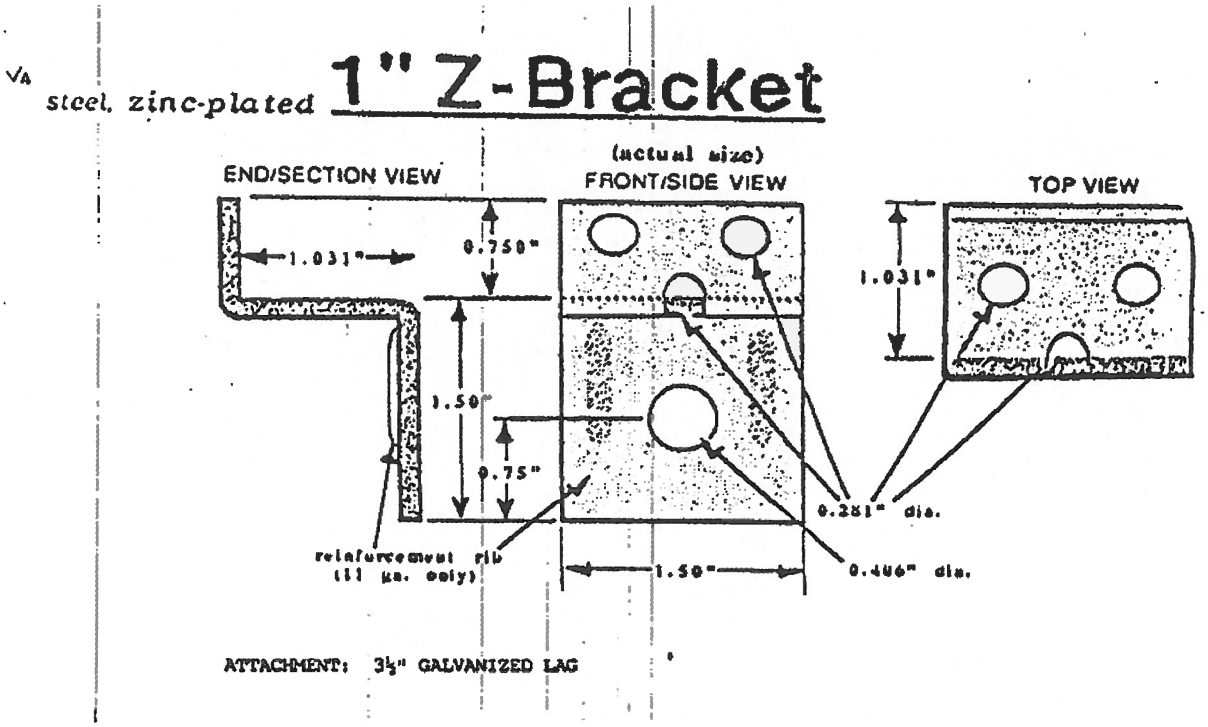
steel, zinc-plated 1" Z-Bracket
(actual size)
END/SECTION VIEW
FRONT/SIDE VIEW
TOP VIEW
1.031"
0.750"
1.50"
0.75"
1.031"
0.281" dia.
0.406" dia.
1.50"
reinforcement rib (11 ga. only)
ATTACHMENT: 3½" GALVANIZED LAG

Proposed Typical Mounting Detail- Brass Signage

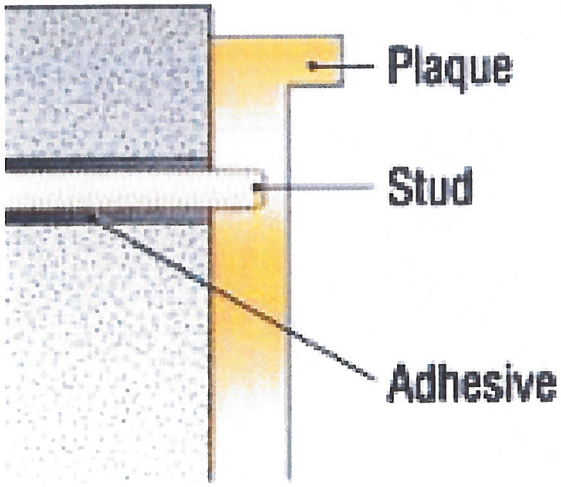

Photograph of Proposed Exterior Light Fixture - Option 1

Bronze wall mounted sconce fixture with artisinal glass lens with Alabaster finish

F/N 2 IO & F/N 3 IO (Indoor/Outdoor)

Framed by bronze powder-coated steel, the F/N 2 & 3 IO showcase our collection of handmade Magic Art Glass. By using a combination of exotic elements and a myriad of glass techniques, we have produced an original, whimsical yet elegant line of fixtures illuminated with incandescent lamps.

Technical Information

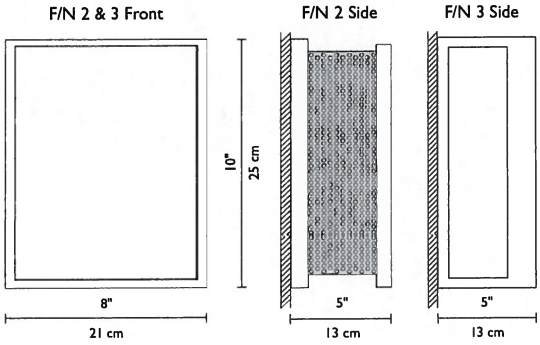

Mounting Specifications

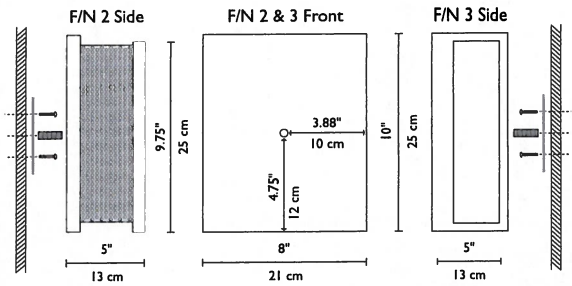

METAL FINISHES

Standard
Bronze
Silver
Special
Wrought Iron

Incandescent Source

1 x 100w (Max) Shatterproof Medium Base

Lamp Included

Wet Location

1881 Industrial Drive
Libertyville, IL 60048
Tele: 847.680.9043
Fax: 847.680.8140
www.wptdesign.com

Visit our showroom at the Dallas Trade Mart

Photograph of Proposed Exterior Light Fixture - Option 2

Bronze wall-mounted sconce fixture with matte frosted glass lens

Murray Feiss OL7204HTBZ 4 Light Cornerstone Outdoor Sconce, Heritage Bronze
By Murray Feiss

ATG Stores

Part #
4760622S

Price
$317.00

Size
Large

Finish
Heritage Bronze

Glass
Cream Snow

Light Bulb
(4)60w B9½ Cand F Incand

Collection
Cornerstone

Dimensions
Wire Length: 8 inches
Width: 10 inches
Projection: 11.75 inches
Height: 20 inches

Scale 1/16" = 1'-0

Elevation of East Facade / North St. Asaph Street

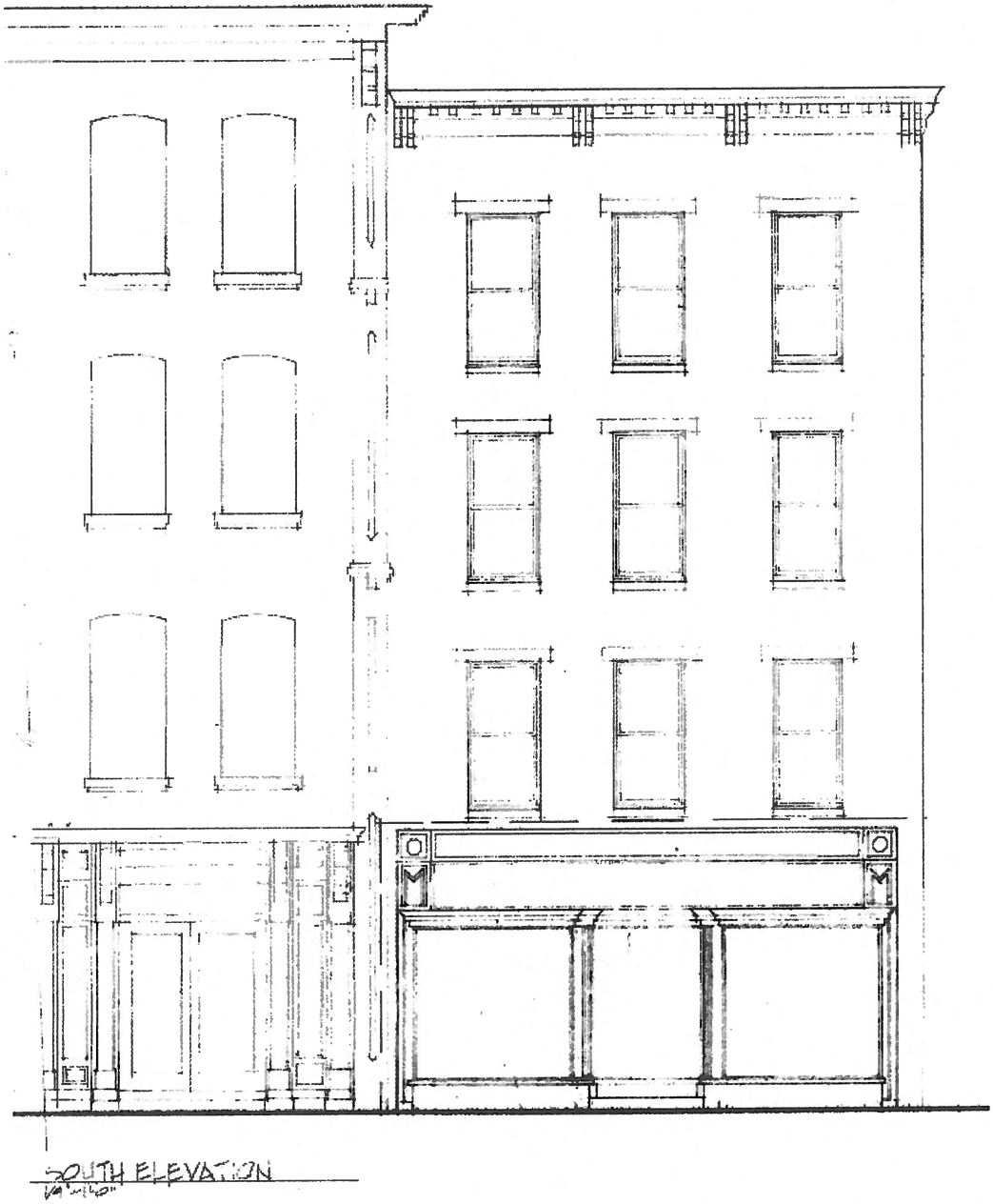

Scale 1/8" = 1'-0

Elevation of South Facade / King Street

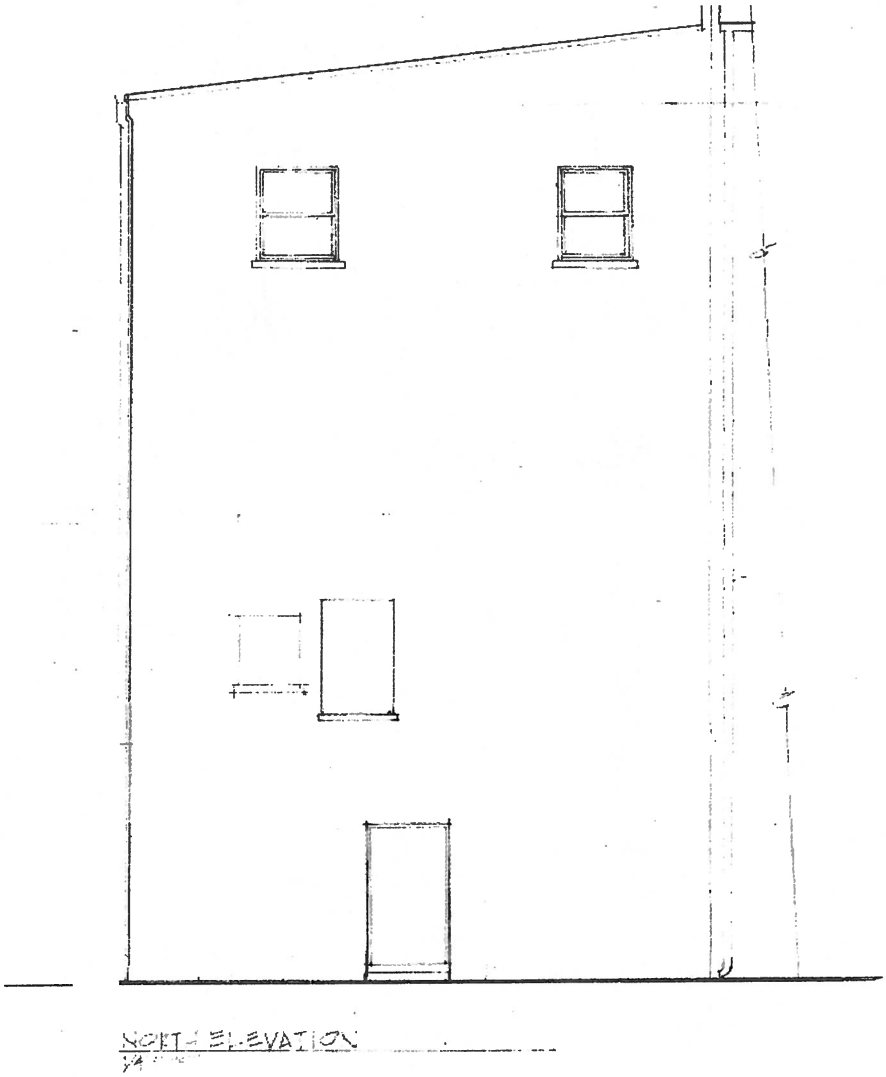

Scale 1/8" = 1'-0"

North Facade / Alley

Alteration Scope of Work:

Full frame replacement of existing windows to be two over two, simulated divided light with 7/8" mullion. Masonry lintel and subsill to remain untouched.

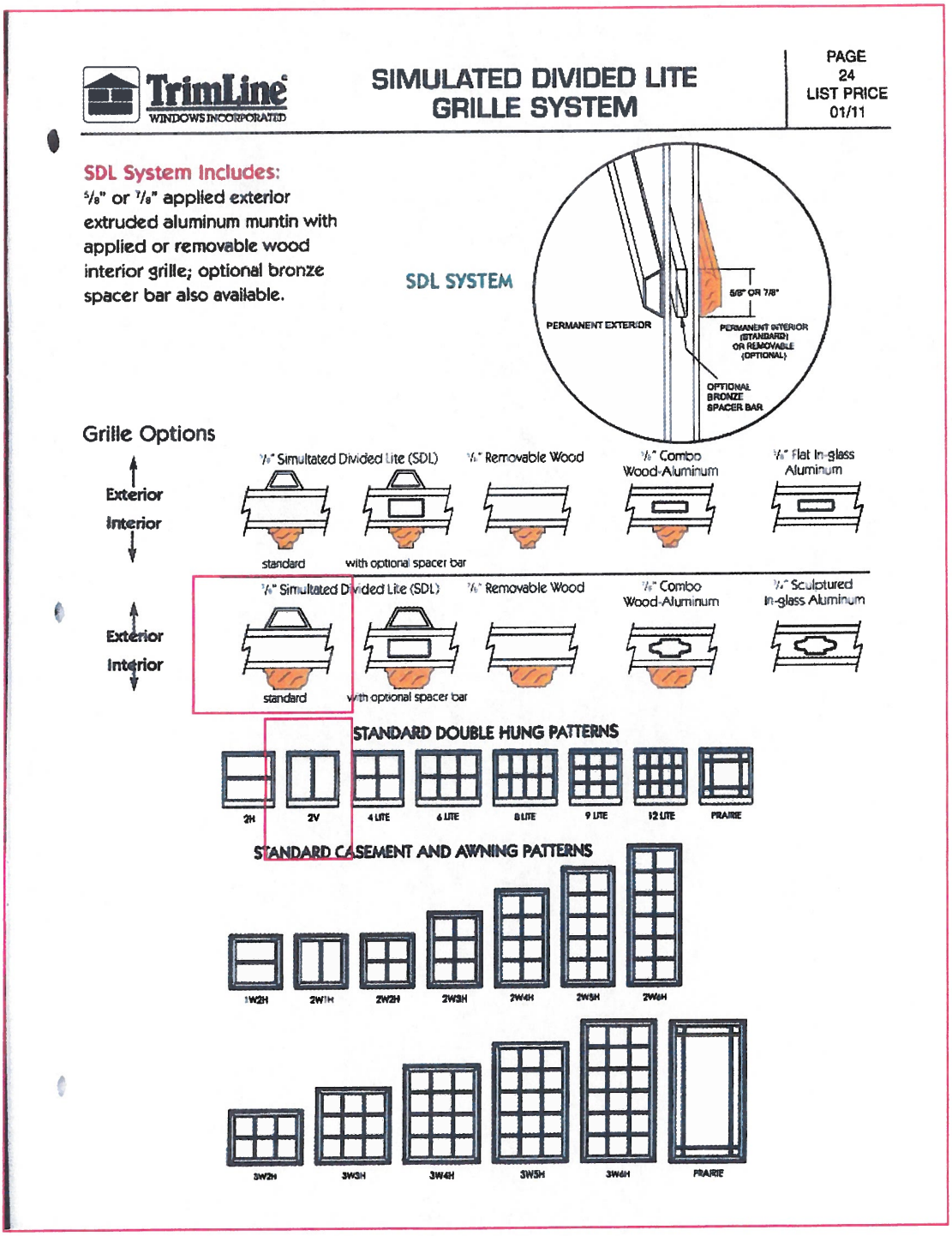

TrimLine WINDOWS INCORPORATED

Ultra-Fit CLASSIC

PAGE 1
LIST PRICE 3/08

ALUMINUM CLAD SASH

- 3/4" insulating glass
  - Warm edge I.G. with super spacer
  - Double strength glass
- E-Z Tilt sash release latches – a major improvement over awkward jamb compression systems – choice of four colors
- Block & tackle balances
- Non-Spread pivot and jamb adjusters for sure fit and tite weather seal insulation
- Available in 5 basic exterior colors: White, Beige, Earthtone, Bronze and Hunter Green plus any custom color
- Optional primed/prefinished interior
- Available in choice of natural wood interiors: can be painted or stained – pine (std.), oak, cherry, or mahogany
- All wood components preservative treated
- Optional factory assembled frame system

Specify Beige or White Jambliner
Order by tite sash opening size (Every 1/8" width & height)

SPECIFY DEGREE OF SILL ANGLE – 14 degree standard

Classic Now Available in Hunter Green

Complete Kit Includes

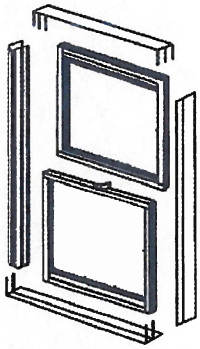

(1) Top Sash
(1) Bottom Sash
(2) Jambliners with Balances
(1) Head Plate
(1) Vinyl Sill
(2) Jamb Adjusters
(1) Head Stop
(12) Assembly Screws
Installations Screws
Jamb Head / Sill Gaskets

TrimLine WINDOWS INCORPORATED — *Legends* CUSTOM CLAD WOOD REPLACEMENT WINDOWS

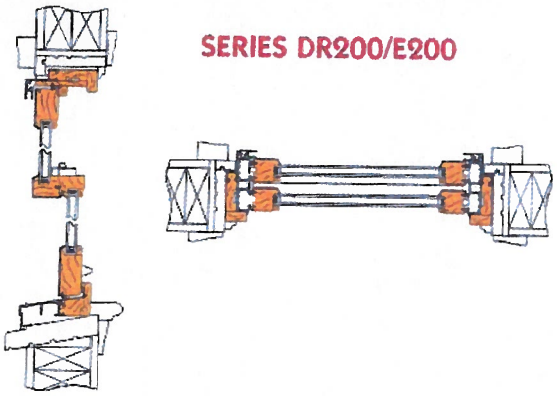

SERIES DR200/E200

TrimLine — *Ultra-Fit* Sash-Pac

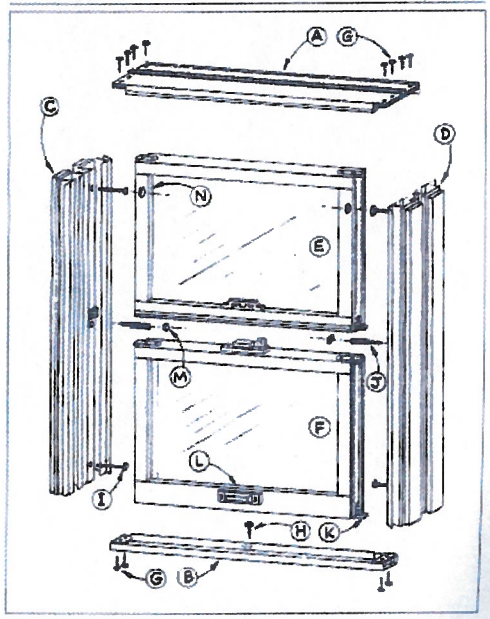

TRIMLINE WINDOWS

DR200 / DR300 CUSTOM CLAD DOUBLE HUNG

SIZE LIMITATIONS

MINIMUMS: WIDTH 14"; HEIGHT 24"

MAXIMUMS: WIDTH 48"; HEIGHT 84"

UI MAX 132"

3/4" INSULATING GLASS UNIT OPTIONS:

CLEAR (STANDARD)

LOW-E COATED + ARGON GAS INFILL

GRID OPTIONS

SNAP-IN WOOD
5/8"
7/8"

SCULPTURED IN-GLASS ALUMINUM
3/4"

FLAT IN-GLASS ALUMINUM
5/8"

COMBO WOOD & FLAT ALUMINUM
5/8"
(STANDARD REMOVABLE INTERIOR WOOD GRILLE; OPTION REMOVABLE)

SIMULATED DIVIDED LITE ("SDL")
5/8" WITH SPACER BAR
7/8" WITH SPACER BAR
5/8" WITHOUT SPACER BAR
7/8" WITHOUT SPACER BAR
(STANDARD PERMANENT INTERIOR WOOD GRILLE; OPTONAL REMOVABLE)

DIAMOND LITE
5/8" FLAT IN-GLASS ALUMINUM