BAR Case # 2011-0364
2011-0365

ADDRESS OF PROJECT: 815 1/2 KING ST

TAX MAP AND PARCEL: 074.02-01-03 ZONING: CD

APPLICATION FOR: *(Please check all that apply)*

☒ CERTIFICATE OF APPROPRIATENESS

☐ PERMIT TO MOVE, REMOVE, ENCAPSULATE OR DEMOLISH
(Required if more than 25 square feet of a structure is to be demolished/impacted)

☐ WAIVER OF VISION CLEARANCE REQUIREMENT and/or YARD REQUIREMENTS IN A VISION CLEARANCE AREA (Section 7-802, Alexandria 1992 Zoning Ordinance)

☐ WAIVER OF ROOFTOP HVAC SCREENING REQUIREMENT
(Section 6-403(B)(3), Alexandria 1992 Zoning Ordinance)

Applicant: ☒ Property Owner ☐ Business *(Please provide business name & contact person)*

Name: 815 1/2 KING ST, LLC

Address: 815 KING ST

City: ALEX State: VA Zip: 22314

Phone: 703 548 1810 E-mail: ROB@PMAPROPERTIES.COM

Authorized Agent *(if applicable)*: ☐ Attorney ☐ Architect ☐ _____

Name: _____ Phone: _____

E-mail: _____

Legal Property Owner:

Name: 815 1/2 KING ST. LLC (CONTRACT PURCHASER)

Address: 815 KING ST

City: ALEX, VA State: VA Zip: 22314

Phone: 703.548.1810 E-mail: ROB@PMAPROPERTIES.COM

☐ **Yes** ☒ **No** Is there an historic preservation easement on this property?
☐ **Yes** ☐ **No** If yes, has the easement holder agreed to the proposed alterations?
☐ **Yes** ☒ **No** Is there a homeowner's association for this property?
☐ **Yes** ☐ **No** If yes, has the homeowner's association approved the proposed alterations?

If you answered yes to any of the above, please attach a copy of the letter approving the project.

DEC 19 2011

BAR Case # 2011-0364
2011-0365

NATURE OF PROPOSED WORK: *Please check all that apply*

- ☐ NEW CONSTRUCTION
- ☒ EXTERIOR ALTERATION: *Please check all that apply.*
  - ☐ awning
  - ☒ doors
  - ☒ lighting
  - ☐ other _____
  - ☐ fence, gate or garden wall
  - ☒ windows
  - ☐ pergola/trellis
  - ☐ HVAC equipment
  - ☐ siding
  - ☐ painting unpainted masonry
  - ☐ shutters
  - ☐ shed
- ☐ ADDITION
- ☐ DEMOLITION/ENCAPSULATION
- ☐ SIGNAGE

DESCRIPTION OF PROPOSED WORK: *Please describe the proposed work in detail (Additional pages may be attached).*

REMODELING EXISTING CANOPY + RESTORING TO ORIGINAL FACE + REPLACING EXISTING ENTRANCE DOORS WITH A NEW STORE FRONT. UNCOVER + RESTORE EXISTING REAR WINDOWS

SUBMITTAL REQUIREMENTS:

Items listed below comprise the **minimum supporting materials** for BAR applications. Staff may request additional information during application review. Please refer to the relevant section of the *Design Guidelines* for further information on appropriate treatments.

Applicants must use the checklist below to ensure the application is complete. Include all information and material that are necessary to thoroughly describe the project. Incomplete applications will delay the docketing of the application for review. Pre-application meetings are required for all proposed additions. All applicants are encouraged to meet with staff prior to submission of a completed application.

Electronic copies of submission materials should be submitted whenever possible.

Demolition/Encapsulation : *All applicants requesting 25 square feet or more of demolition/encapsulation must complete this section. Check N/A if an item in this section does not apply to your project.*

	N/A	
☐	☒	Survey plat showing the extent of the proposed demolition/encapsulation.
☐	☐	Existing elevation drawings clearly showing all elements proposed for demolition/encapsulation.
☐	☐	Clear and labeled photographs of all elevations of the building if the entire structure is proposed to be demolished.
☐	☐	Description of the reason for demolition/encapsulation.
☐	☐	Description of the alternatives to demolition/encapsulation and why such alternatives are not considered feasible.

BAR Case # _____

Additions & New Construction: *Drawings must be to scale and should not exceed 11" x 17" unless approved by staff. All plans must be folded and collated into 12 complete 8 1/2" x 11" sets. Additional copies may be requested by staff for large-scale development projects or projects fronting Washington Street. Check N/A if an item in this section does not apply to your project.*

	N/A	
☐	☐	Scaled survey plat showing dimensions of lot and location of existing building and other structures on the lot, location of proposed structure or addition, dimensions of existing structure(s), proposed addition or new construction, and all exterior, ground and roof mounted equipment.
☐	☐	FAR & Open Space calculation form.
☐	☐	Clear and labeled photographs of the site, surrounding properties and existing structures, if applicable.
☐	☐	Existing elevations must be scaled and include dimensions.
☐	☐	Proposed elevations must be scaled and include dimensions. Include the relationship to adjacent structures in plan and elevations.
☐	☐	Materials and colors to be used must be specified and delineated on the drawings. Actual samples may be provided or required.
☐	☐	Manufacturer's specifications for materials to include, but not limited to: roofing, siding, windows, doors, lighting, fencing, HVAC equipment and walls.
☐	☐	For development site plan projects, a model showing mass relationships to adjacent properties and structures.

Signs & Awnings: *One sign per building under one square foot does not require BAR approval unless illuminated. All other signs including window signs require BAR approval. Check N/A if an item in this section does not apply to your project.*

	N/A	
☐	☐	Linear feet of building: Front: _____ Secondary front (if corner lot): _____.
☐	☐	Square feet of existing signs to remain: _____.
☐	☐	Photograph of building showing existing conditions.
☐	☐	Dimensioned drawings of proposed sign identifying materials, color, lettering style and text.
☐	☐	Location of sign (show exact location on building including the height above sidewalk).
☐	☐	Means of attachment (drawing or manufacturer's cut sheet of bracket if applicable).
☐	☐	Description of lighting (if applicable). Include manufacturer's cut sheet for any new lighting fixtures and information detailing how it will be attached to the building's facade.

Alterations: *Check N/A if an item in this section does not apply to your project.*

	N/A	
☒	☐	Clear and labeled photographs of the site, especially the area being impacted by the alterations, all sides of the building and any pertinent details.
☒	☐	Manufacturer's specifications for materials to include, but not limited to: roofing, siding, windows, doors, lighting, fencing, HVAC equipment and walls.
☒	☐	Drawings accurately representing the changes to the proposed structure, including materials and overall dimensions. Drawings must be to scale.
☐	☒	An official survey plat showing the proposed locations of HVAC units, fences, and sheds.
☒	☐	Historic elevations or photographs should accompany any request to return a structure to an earlier appearance.

BAR Case # _____

ALL APPLICATIONS: *Please read and check that you have read and understand the following items:*

- [x] I have submitted a filing fee with this application. (Checks should be made payable to the City of Alexandria. Please contact staff for assistance in determining the appropriate fee.)
- [x] I understand the notice requirements and will return a copy of the three respective notice forms to BAR staff at least five days prior to the hearing. If I am unsure to whom I should send notice I will contact Planning and Zoning staff for assistance in identifying adjacent parcels.
- [x] I, the applicant, or an authorized representative will be present at the public hearing.
- [x] I understand that any revisions to this initial application submission (including applications deferred for restudy) must be accompanied by the BAR Supplemental form and 12 sets of revised materials.

The undersigned hereby attests that all of the information herein provided including the site plan, building elevations, prospective drawings of the project, and written descriptive information are true, correct and accurate. The undersigned further understands that, should such information be found incorrect, any action taken by the Board based on such information may be invalidated. The undersigned also hereby grants the City of Alexandria permission to post placard notice as required by Article XI, Division A, Section 11-301(B) of the 1992 Alexandria City Zoning Ordinance, on the property which is the subject of this application. The undersigned also hereby authorizes the City staff and members of the BAR to inspect this site as necessary in the course of research and evaluating the application. The applicant, if other than the property owner, also attests that he/she has obtained permission from the property owner to make this application.

APPLICANT ~~OR AUTHO~~RIZED AGENT:

Signature: _____

Printed Name: ROB KAUFMAN

Date: 12.19.11

OWNERSHIP AND DISCLOSURE STATEMENT
Use additional sheets if necessary

1. Applicant. State the name, address and percent of ownership of any person or entity owning an interest in the applicant, unless the entity is a corporation or partnership, in which case identify each owner of more than ten percent. The term ownership interest shall include any legal or equitable interest held at the time of the application in the real property which is the subject of the application.

Name	Address	Percent of Ownership
1. ROB KAUFMAN	815 KING ST ALEXANDRIA, VA	50%
2. CHRIS LINDSAY	WAKEFIELD CRT ALEXANDRIA, VA	50%
3.		

2. Property. State the name, address and percent of ownership of any person or entity owning an interest in the property located at 815 1/2 KING ST (address), unless the entity is a corporation or partnership, in which case identify each owner of more than ten percent. The term ownership interest shall include any legal or equitable interest held at the time of the application in the real property which is the subject of the application.

Name	Address	Percent of Ownership
1. SAME		
2.		
3.		

3. Business or Financial Relationships. Each person or entity listed above (1 and 2), with an ownership interest in the applicant or in the subject property is required to disclose **any** business or financial relationship, as defined by Section 11-350 of the Zoning Ordinance, existing at the time of this application, or within the12-month period prior to the submission of this application with any member of the Alexandria City Council, Planning Commission, Board of Zoning Appeals or either Boards of Architectural Review.

Name of person or entity	Relationship as defined by Section 11-350 of the Zoning Ordinance	Member of the Approving Body (i.e. City Council, Planning Commission, etc.)
1. N/A		
2.		
3.		

NOTE: Business or financial relationships of the type described in Sec. 11-350 that arise after the filing of this application and before each public hearing must be disclosed prior to the public hearings.

As the applicant or the applicant's authorized agent, I hereby attest to the best of my ability that the information provided above is true and correct.

12.19.11 — Date
KAUFMAN — Printed Name
Signature

PMA Properties
815 ½ King Street

BAR
April 4, 2012

Explanation of some of the Details in the Submission

MARQUEE AND STOREFRONT
The building is being renovated to be a theater
The frame of the existing marquee will be retained and renovated per drawing presented
The space between the top of the marquee and the top of the existing arch will be windows to allow sun shine to enter the new high ceiling lobby
The ticket booth will be retained and reclad in materials matching the new store front
To control traffic flow the entire entrance will be replaced with 6' x 8' operating doors

SECOND FLOOR WINDOW RESTORATION
The windows on the second floor are about 3 feet from the framing that supports the balcony seating which is framed in an irregular basis as well as mechanical equipment. It is proposed that in order to cover up the unsightly view from the exterior we install an opaque film on the windows and install tube lighting on the inside which will be lit when the lobby lights are on. During the day and night you will not be able to see the framing and mechanical equipment.

BRICKWORK
We are going to make an attempt to remove the slabs presently on the front of the building. We have concerns that the method of installation may have made it impossible to restore it. It is not an available brick in either texture or size.

MAR 2 1 2012

OLD TOWN THEATER RENOVATION

PROPOSED FACADE RENDERING

RITTER ARCHITECTS

3.21.12

OLD TOWN THEATER RENOVATION

RITTER ARCHITECTS

PROPOSED FACADE RENDERING

3.14.12

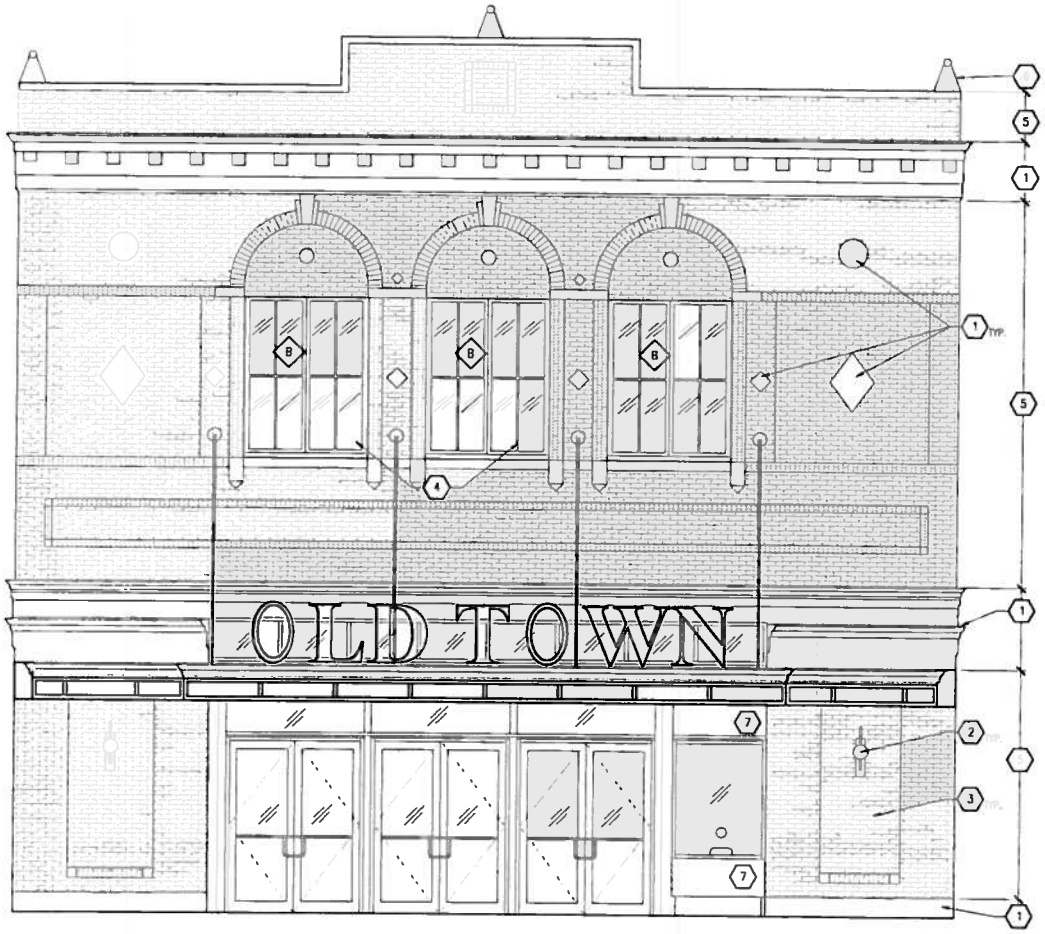

SHEET KEYNOTES

1. STRIP (E) PAINT AND RESTORE/PAINT BUILDING'S CORNICE AND DECORATIVE TILES TO A LIGHTER LIMESTONE COLOR, OR APPROVED EQUAL.
2. INSTALL NEW EXTERIOR LIGHTING FIXTURES PER LIGHTING SCHEDULE.
3. REMOVE (E) STONE AND RESTORE BRICK TO MATCH THE REST OF THE FACADE.
4. RESTORE (E) WINDOWS TO ORIGINAL CONDITION.
5. CLEAN (E) BRICK FACADE.
6. ADD 3 FINIALS TO THE ROOF PARAPET AS SHOWN IN ORIGINAL PICTURES.
7. SPANDREL PANEL

OLD TOWN THEATER RENOVATION

RITTER ARCHITECTS

NEW PROPOSED FRONT ELEVATION

SCALE: 3/16"=1'

3.14.12

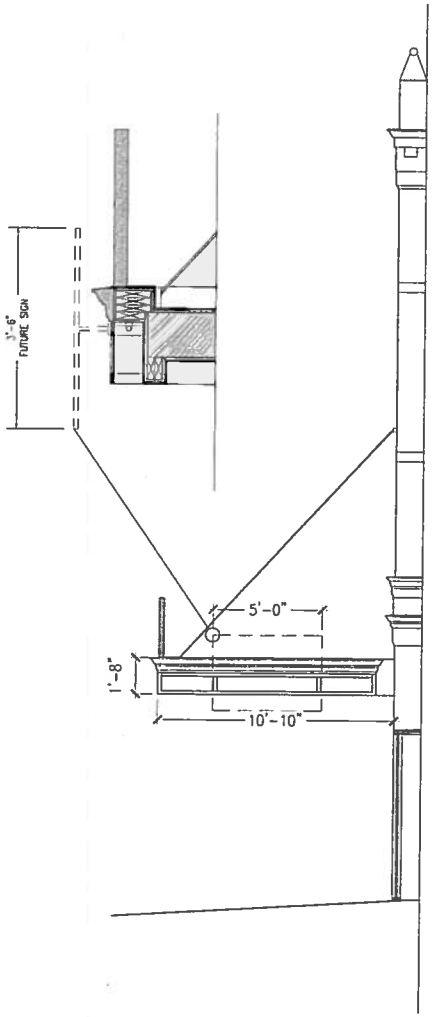

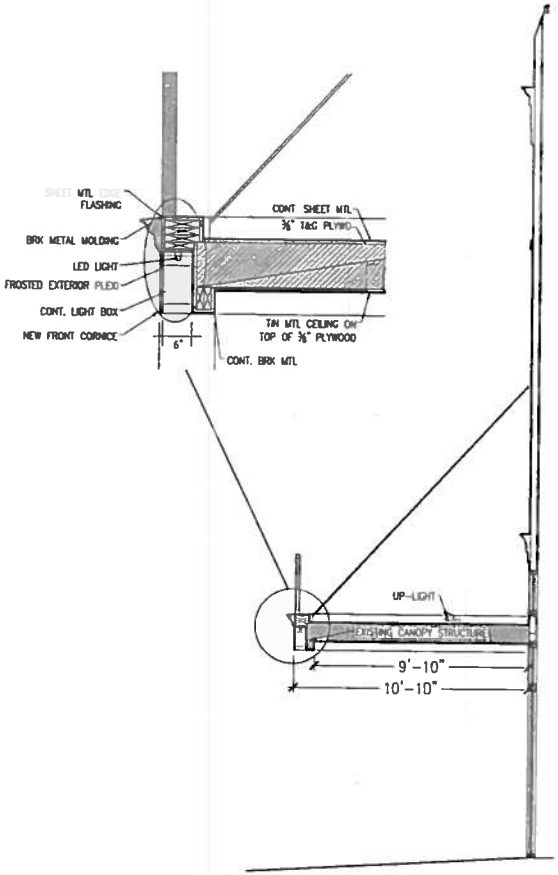

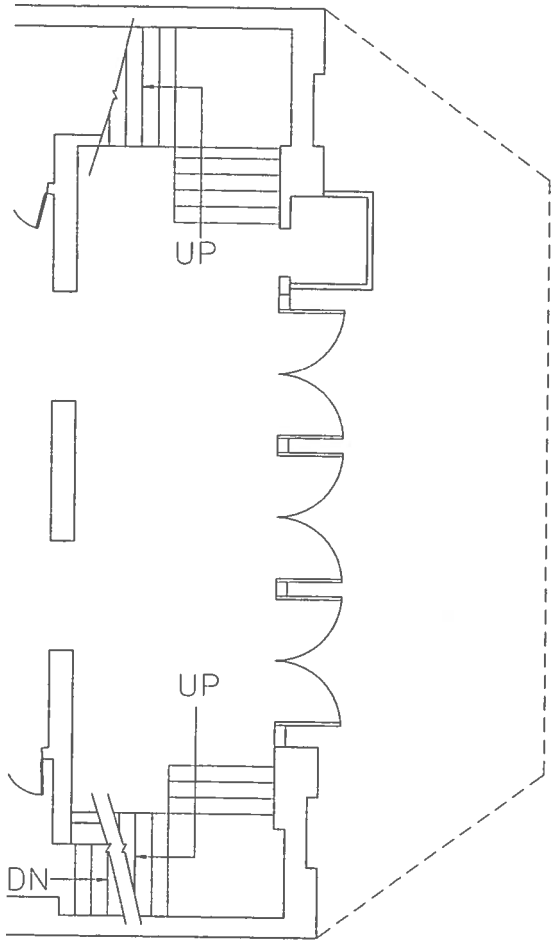

OLD TOWN THEATER RENOVATION

RITTER ARCHITECTS

NEW PROPOSED SIDE ELEVATION, CANOPY SECTION AND PARTIAL FLOOR PLAN

SCALE: 3/16"=1'

3.14.12

ELA LIGHTING EXTERIOR DECORATIVE USE BR 14 BRACKET

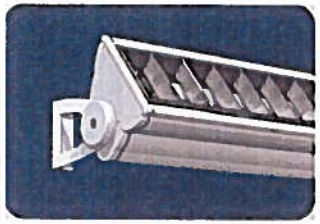

PINNACLE/PEAK LINEAR
USE PW-1T8-36-WH6-UNV-1C-BR

EXTERIOR PARAPET WASH

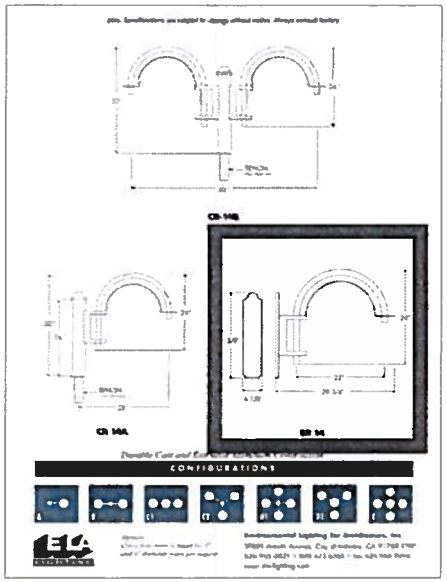

OLD TOWN THEATER RENOVATION

RITTER ARCHITECTS

NEW PROPOSED EXTERIOR LIGHTING

SCALE: 3/16"=1'

3.15.12

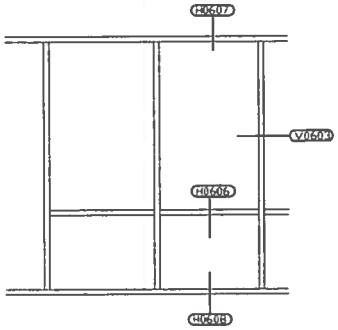

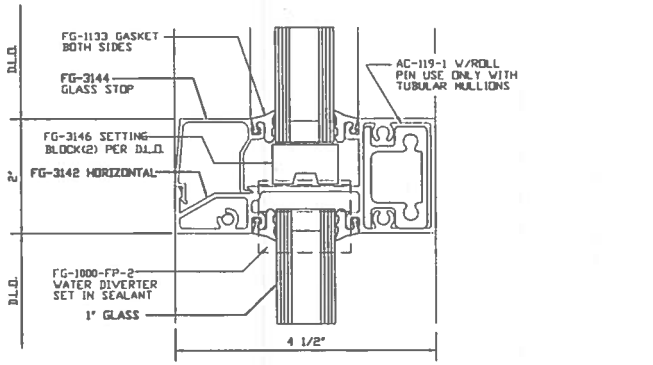

FG-3000-Standard Storefront-Intermediate Horizontal
H0601

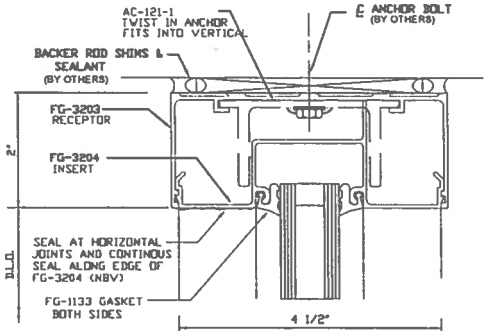

FG-3000 - Standard Storefront - Head Horizontal
Oldcastle BuildingEnvelope? - Terrell, Texas - 972-551-6100
H0607

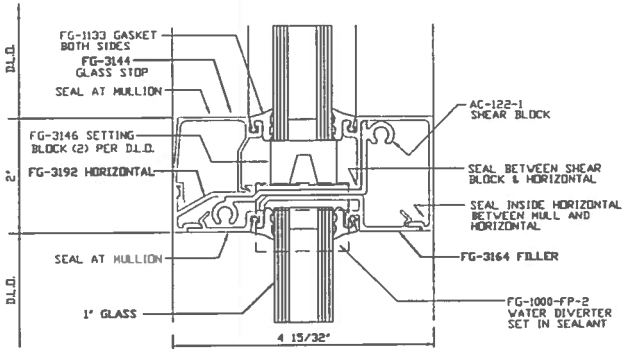

FG-3000-Standard Storefront-Intermediate Horizontal
H0606

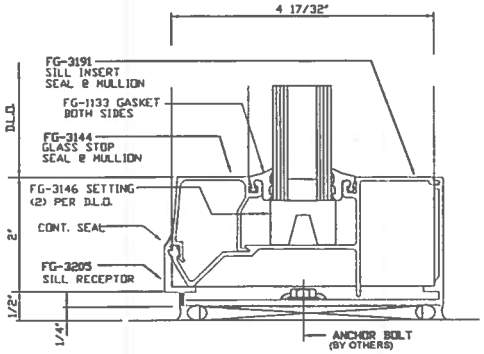

FG-3000-Standard Storefront-Sill Horizontal
H0608

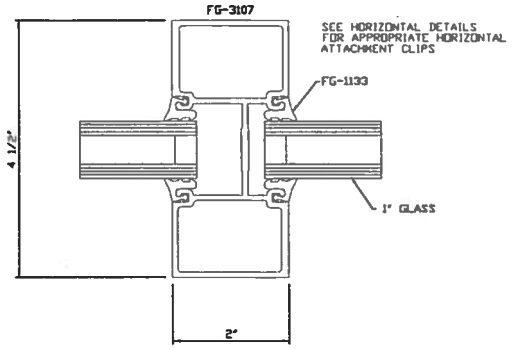

FG-3000 - Standard Storefront - Vertical Mullion
Oldcastle BuildingEnvelope? - Terrell, Texas - 972-551-6100
V0603

OLD TOWN THEATER RENOVATION

RITTER ARCHITECTS

NEW STOREFRONT SYSTEM. BASES OF DESIGN

SCALE: 3/16"=1'

3.15.12