BAR Case # _____

ADDRESS OF PROJECT: 224 N. Alfred Street

TAX MAP AND PARCEL: 6404 05 14 **ZONING:** RB

APPLICATION FOR: *(Please check all that apply)*

☒ CERTIFICATE OF APPROPRIATENESS

☐ PERMIT TO MOVE, REMOVE, ENCAPSULATE OR DEMOLISH
(Required if more than 25 square feet of a structure is to be demolished/impacted)

☐ WAIVER OF VISION CLEARANCE REQUIREMENT and/or YARD REQUIREMENTS IN A VISION CLEARANCE AREA (Section 7-802, Alexandria 1992 Zoning Ordinance)

☒ WAIVER OF ROOFTOP HVAC SCREENING REQUIREMENT
(Section 6-403(B)(3), Alexandria 1992 Zoning Ordinance)

Applicant: ☒ Property Owner ☐ Business *(Please provide business name & contact person)*

Name: Rebecca Heint-Lewis

Address: 8450 Porter Lane

City: Alexandria State: VA Zip: 22308

Phone: 703-549-4362 E-mail: jrjm.lewis@cox.net

Authorized Agent *(if applicable)*: ☐ Attorney ☒ Architect ☐ _____

Name: Lee McAllister Phone: 703 973 8261 (c)
703-519-8623 (w)

E-mail: email@mca-arch.com

Legal Property Owner:

Name: Rebecca Heint-Lewis + James Lewis

Address: 8450 Porter Lane

City: Alexandria State: VA Zip: 22308

Phone: 703-360-2633 E-mail: jrjm.lewis@cox.net

☐ Yes ☐ No Is there an historic preservation easement on this property?
☐ Yes ☐ No If yes, has the easement holder agreed to the proposed alterations?
☐ Yes ☐ No Is there a homeowner's association for this property?
☐ Yes ☐ No If yes, has the homeowner's association approved the proposed alterations?

If you answered yes to any of the above, please attach a copy of the letter approving the project.

RECEIVED
APR - 2 2012
PLANNING & ZONING

BAR Case # _____

NATURE OF PROPOSED WORK: *Please check all that apply*

- ☐ NEW CONSTRUCTION
- ☒ EXTERIOR ALTERATION: *Please check all that apply.*
  - ☐ awning
  - ☐ doors
  - ☐ lighting
  - ☐ other _____
  - ☐ fence, gate or garden wall
  - ☐ windows
  - ☐ pergola/trellis
  - ☐ HVAC equipment
  - ☐ siding
  - ☐ painting unpainted masonry
  - ☐ shutters
  - ☐ shed
- ☐ ADDITION
- ☐ DEMOLITION/ENCAPSULATION
- ☐ SIGNAGE

DESCRIPTION OF PROPOSED WORK: *Please describe the proposed work in detail (Additional pages may be attached).*

Installation of compresser unit for HVAC on the roof at the back of the house

SUBMITTAL REQUIREMENTS:

Items listed below comprise the **minimum supporting materials** for BAR applications. Staff may request additional information during application review. Please refer to the relevant section of the *Design Guidelines* for further information on appropriate treatments.

Applicants must use the checklist below to ensure the application is complete. Include all information and material that are necessary to thoroughly describe the project. Incomplete applications will delay the docketing of the application for review. Pre-application meetings are required for all proposed additions. All applicants are encouraged to meet with staff prior to submission of a completed application.

Electronic copies of submission materials should be submitted whenever possible.

Demolition/Encapsulation : *All applicants requesting 25 square feet or more of demolition/encapsulation must complete this section. Check N/A if an item in this section does not apply to your project.*

	N/A	
☐	☐	Survey plat showing the extent of the proposed demolition/encapsulation.
☐	☐	Existing elevation drawings clearly showing all elements proposed for demolition/encapsulation.
☐	☐	Clear and labeled photographs of all elevations of the building if the entire structure is proposed to be demolished.
☐	☐	Description of the reason for demolition/encapsulation.
☐	☐	Description of the alternatives to demolition/encapsulation and why such alternatives are not considered feasible.

BAR Case # _____

Additions & New Construction: *Drawings must be to scale and should not exceed 11" x 17" unless approved by staff. All plans must be folded and collated into 12 complete 8 1/2" x 11" sets. Additional copies may be requested by staff for large-scale development projects or projects fronting Washington Street. Check N/A if an item in this section does not apply to your project.*

N/A

- ☐ ☐ Scaled survey plat showing dimensions of lot and location of existing building and other structures on the lot, location of proposed structure or addition, dimensions of existing structure(s), proposed addition or new construction, and all exterior, ground and roof mounted equipment.
- ☐ ☐ FAR & Open Space calculation form.
- ☐ ☐ Clear and labeled photographs of the site, surrounding properties and existing structures, if applicable.
- ☐ ☐ Existing elevations must be scaled and include dimensions.
- ☐ ☐ Proposed elevations must be scaled and include dimensions. Include the relationship to adjacent structures in plan and elevations.
- ☐ ☐ Materials and colors to be used must be specified and delineated on the drawings. Actual samples may be provided or required.
- ☐ ☐ Manufacturer's specifications for materials to include, but not limited to: roofing, siding, windows, doors, lighting, fencing, HVAC equipment and walls.
- ☐ ☐ For development site plan projects, a model showing mass relationships to adjacent properties and structures.

Signs & Awnings: *One sign per building under one square foot does not require BAR approval unless illuminated. All other signs including window signs require BAR approval. Check N/A if an item in this section does not apply to your project.*

N/A

- ☐ ☐ Linear feet of building: Front: _____ Secondary front (if corner lot): _____.
- ☐ ☐ Square feet of existing signs to remain: _____.
- ☐ ☐ Photograph of building showing existing conditions.
- ☐ ☐ Dimensioned drawings of proposed sign identifying materials, color, lettering style and text.
- ☐ ☐ Location of sign (show exact location on building including the height above sidewalk).
- ☐ ☐ Means of attachment (drawing or manufacturer's cut sheet of bracket if applicable).
- ☐ ☐ Description of lighting (if applicable). Include manufacturer's cut sheet for any new lighting fixtures and information detailing how it will be attached to the building's facade.

Alterations: *Check N/A if an item in this section does not apply to your project.*

N/A

- ☑ ☐ Clear and labeled photographs of the site, especially the area being impacted by the alterations, all sides of the building and any pertinent details.
- ☑ ☐ Manufacturer's specifications for materials to include, but not limited to: roofing, siding, windows, doors, lighting, fencing, HVAC equipment and walls.
- ☑ ☐ Drawings accurately representing the changes to the proposed structure, including materials and overall dimensions. Drawings must be to scale.
- ☑ ☐ An official survey plat showing the proposed locations of HVAC units, fences, and sheds.
- ☐ ☒ Historic elevations or photographs should accompany any request to return a structure to an earlier appearance.

BAR Case # _____

ALL APPLICATIONS: *Please read and check that you have read and understand the following items:*

☑ I have submitted a filing fee with this application. (Checks should be made payable to the City of Alexandria. Please contact staff for assistance in determining the appropriate fee.)

☑ I understand the notice requirements and will return a copy of the three respective notice forms to BAR staff at least five days prior to the hearing. If I am unsure to whom I should send notice I will contact Planning and Zoning staff for assistance in identifying adjacent parcels.

☑ I, the applicant, or an authorized representative will be present at the public hearing.

☑ I understand that any revisions to this initial application submission (including applications deferred for restudy) must be accompanied by the BAR Supplemental form and 12 sets of revised materials.

The undersigned hereby attests that all of the information herein provided including the site plan, building elevations, prospective drawings of the project, and written descriptive information are true, correct and accurate. The undersigned further understands that, should such information be found incorrect, any action taken by the Board based on such information may be invalidated. The undersigned also hereby grants the City of Alexandria permission to post placard notice as required by Article XI, Division A, Section 11-301(B) of the 1992 Alexandria City Zoning Ordinance, on the property which is the subject of this application. The undersigned also hereby authorizes the City staff and members of the BAR to inspect this site as necessary in the course of research and evaluating the application. The applicant, if other than the property owner, also attests that he/she has obtained permission from the property owner to make this application.

APPLICANT OR AUTHORIZED AGENT:

Signature: _____

Printed Name: Rebecca Hecht-Lewis

Date: 4/1/12

OWNERSHIP AND DISCLOSURE STATEMENT
Use additional sheets if necessary

1. Applicant. State the name, address and percent of ownership of any person or entity owning an interest in the applicant, unless the entity is a corporation or partnership, in which case identify each owner of more than ten percent. The term ownership interest shall include any legal or equitable interest held at the time of the application in the real property which is the subject of the application.

Name	Address	Percent of Ownership
1. Rebecca + Jim Lewis	8450 Porter Lane Alexandria, VA 22308	100%
2.		
3.		

2. Property. State the name, address and percent of ownership of any person or entity owning an interest in the property located at 224 N. Alfred St (address), unless the entity is a corporation or partnership, in which case identify each owner of more than ten percent. The term ownership interest shall include any legal or equitable interest held at the time of the application in the real property which is the subject of the application.

Name	Address	Percent of Ownership
1. Rebecca + Jim Lewis	8450 Porter Lane Alexandria, VA	100%
2.		
3.		

3. Business or Financial Relationships. Each person or entity listed above (1 and 2), with an ownership interest in the applicant or in the subject property is required to disclose **any** business or financial relationship, as defined by Section 11-350 of the Zoning Ordinance, existing at the time of this application, or within the12-month period prior to the submission of this application with any member of the Alexandria City Council, Planning Commission, Board of Zoning Appeals or either Boards of Architectural Review.

Name of person or entity	Relationship as defined by Section 11-350 of the Zoning Ordinance	Member of the Approving Body (i.e. City Council, Planning Commission, etc.)
1. N/A		
2.		
3.		

NOTE: Business or financial relationships of the type described in Sec. 11-350 that arise after the filing of this application and before each public hearing must be disclosed prior to the public hearings.

As the applicant or the applicant's authorized agent, I hereby attest to the best of my ability that the information provided above is true and correct.

4/1/12	Rebecca H. Lewis	
Date	Printed Name	Signature

J-A-LEWIS J.A. Lewis

THE SCOPE OF WORK INCLUDES INTERIOR DUCT WORK RENOVATIONS THAT REQUIRE A NEW AC UNIT TO BE MOUNTED BETWEEN THE TWO DIFFERENT ROOF TOPS OF THE HOUSE, AS SHOWN IN THE ATTACHED IMAGES. PLEASE ALSO REFER TO THE ATTACHED SPEC SHEET.

RECEIVED
APR - 2 2012
PLANNING & ZONING

McAllister ARCHITECTS, P.C.

DATE: 03/30/2012	PROJECT: ALFRED STREET RESIDENCE REPAIRS		PROPOSED SCHEME
SCALE: NTS			
DRAWN BY: AMELIA DECKER	REQUESTED BY: REBECCA LEWIS		REF.: 1036

1435 POWHATAN STREET ALEXANDRIA VA 22314 703.519.8623 703.519.0102.FAX EMAIL@MCA-ARCH.COM

DIMENSIONS - ENGLISH

UNIT	SERIES	ELECTRICAL CHARACTERISTICS				A	B	C	D	E	F	G	K	L	M	N	P	OPERATING WEIGHT (lbs)	SHIPPING WEIGHT (lbs)	SHIPPING DIMENSIONS (L x W x H)
		208-230-1-60	230-1-60	208/230-3-60	460-3-60															
24ACB418	0	X	0	0	0	31 3/16"	35 3/4"	3 3/4"	5/8"	6 9/16"	24 11/16"	9 1/8"	2 13/16"	1/2"	16 1/4"	16"	16 5/8"	197	225	32 3/8" X 35 1/2" X 39 3/8"
24ACB424	0	X	0	0	0	35"	28 15/16"	3 3/4"	5/8"	6 9/16"	28 7/16"	9 1/8"	2 13/16"	1/2"	17 1/2"	15 3/4"	14 1/2"	184	223	36 1/8" X 39 5/16" X 32 9/16"
24ACB430	0	X	0	0	0	35"	28 15/16"	3 3/4"	3/4"	6 9/16"	28 7/16"	9 1/8"	2 13/16"	1/2"	16 1/4"	15 1/2"	14 1/2"	177	218	36 1/8" X 39 5/16" X 32 9/16"
24ACB436	0	X	0	0	0	35"	35 3/4"	3 3/4"	3/4"	6 9/16"	28 7/16"	9 1/8"	2 13/16"	1/2"	18 1/4"	18 1/2"	17 1/2"	225	259	36 1/8" X 39 5/16" X 39 3/8"
24ACB442	0	X	0	0	0	35"	28 15/16"	3 7/8"	7/8"	6 9/16"	28 7/16"	9 1/8"	2 15/16"	5/8"	15 1/4"	16 7/8"	13 1/4"	228	267	36 1/8" X 39 5/16" X 32 9/16"
24ACB448	0	X	0	0	0	35"	32 5/16"	3 7/8"	7/8"	6 9/16"	28 7/16"	9 1/8"	2 15/16"	5/8"	17 3/4"	18 3/4"	15 1/2"	270	303	36 1/8" X 39 5/16" X 35 15/16"
24ACB460	0	X	0	0	0	35"	45 15/16"	3 7/8"	7/8"	6 9/16"	28 7/16"	9 1/8"	2 15/16"	5/8"	17 7/8"	18 5/8"	20 1/4"	337	372	36 1/8" X 39 5/16" X 49 9/16"

X = YES
0 = NO

NOTES:

1. ALLOW 30" CLEARANCE TO SERVICE SIDE OF UNIT, 48" ABOVE UNIT, 6" ON ONE SIDE, 12" ON REMAINING SIDE, AND 24" BETWEEN UNITS FOR PROPER AIRFLOW.
2. MINIMUM OUTDOOR OPERATING AMBIENT IN COOLING MODE IS 55°F, MAX. 125°F.
3. SERIES DESIGNATION IS THE 13TH POSITION OF THE UNIT MODEL NUMBER.
4. CENTER OF GRAVITY ⊕.
5. ALL DIMENSIONS ARE IN "INCHES" UNLESS NOTED.

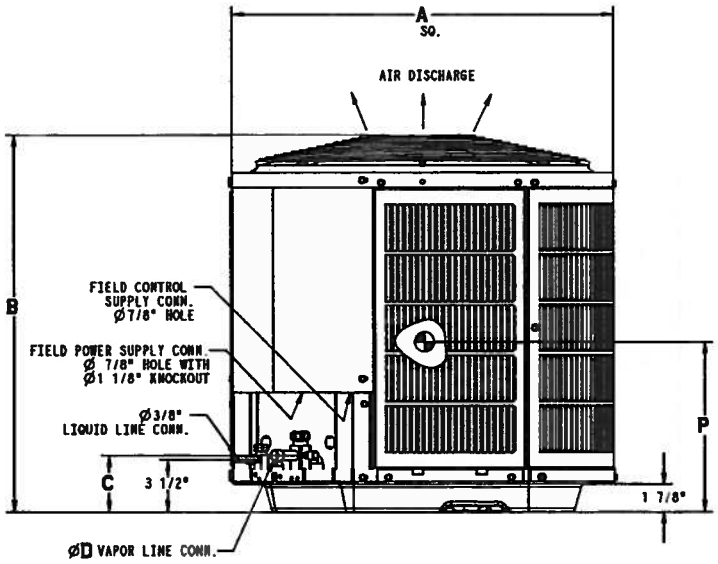

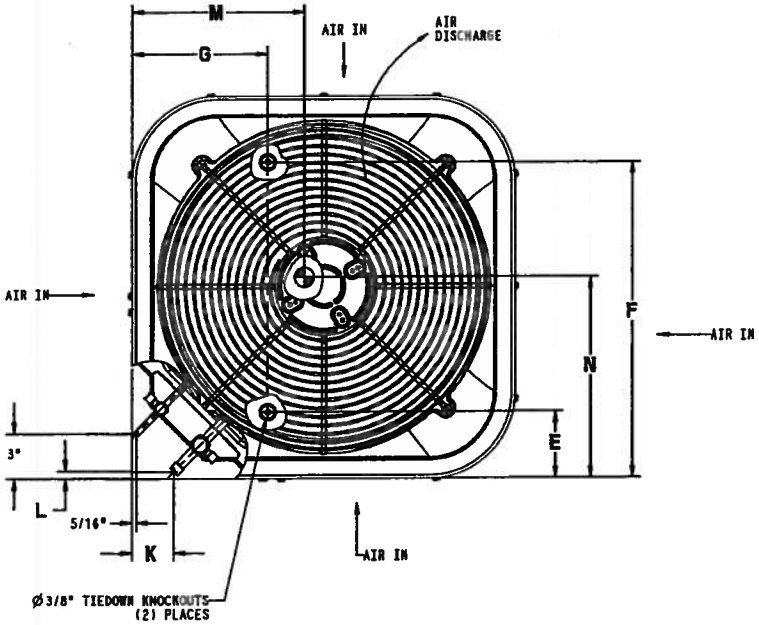

UNIT SIZE	MINIMUM MOUNTING PAD DIMENSIONS
-	26" X 26"
18	31 1/2" X 31 1/2"
24,30,36,42,48,60	35" X 35"

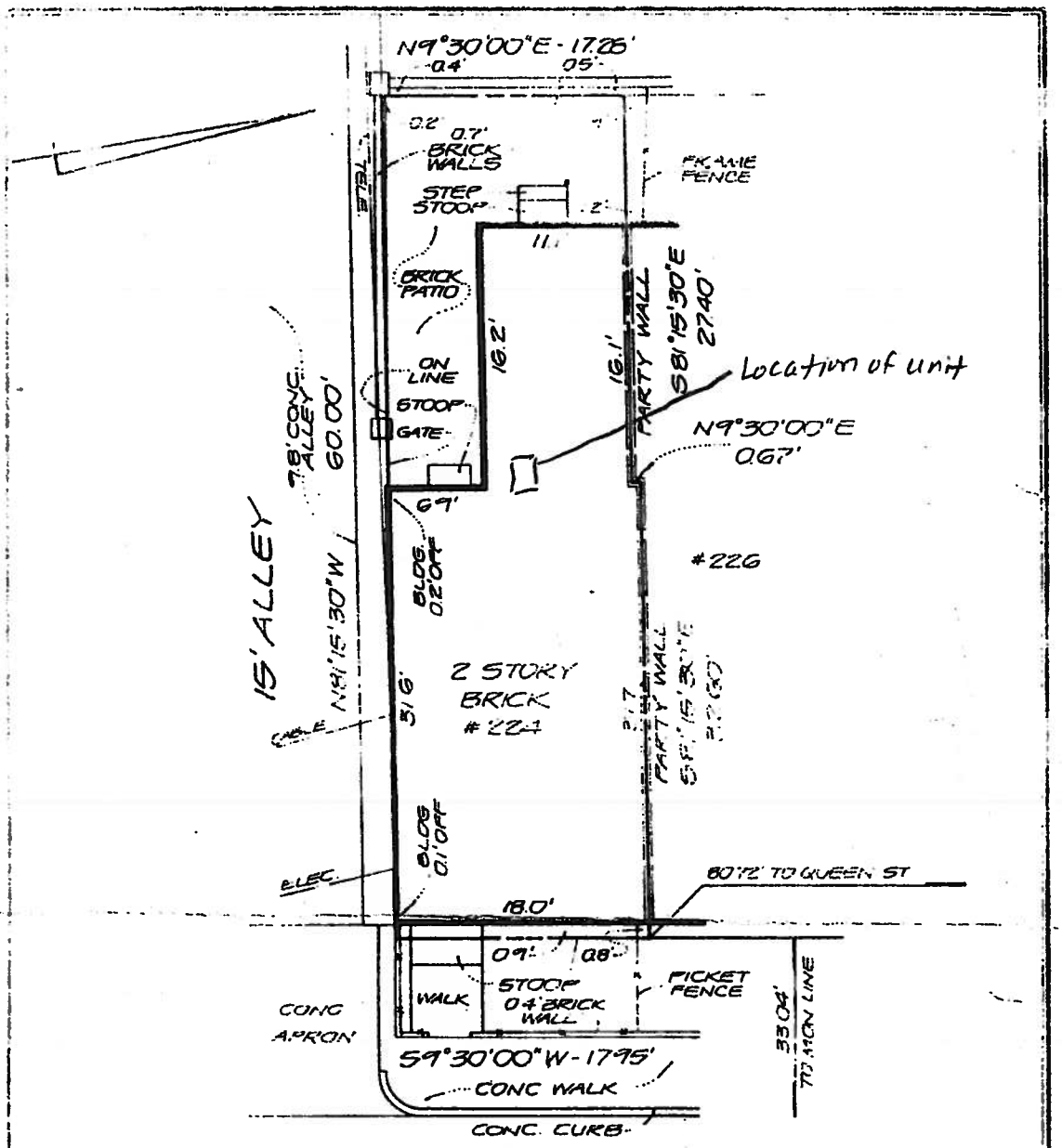

N. ALFRED STREET

PLAT
SHOWING HOUSE LOCATION ON
THE PROPERTY LOCATED AT

224 N. ALFRED STREET

CITY OF ALEXANDRIA, VIRGINIA

SCALE: 1" = 10' DEC. 14, 1992

NOTE: DESCRIPTION OF THE SECOND FLOOR PARTY WALL WALLS IS RECORDED AT DEED BOOK 744, PAGE 47.

THIS PROPERTY IS NOT LOCATED IN A FLOOD HAZARD AREA.

PLAT SUBJECT TO RESTRICTIONS OF RECORD

TITLE REPORT NOT FURNISHED

I HEREBY CERTIFY THAT THE POSITIONS OF ALL THE EXISTING IMPROVEMENTS HAVE BEEN CAREFULLY ESTABLISHED BY A TRANSIT TAPE SURVEY AND UNLESS OTHERWISE SHOWN THERE ARE NO VISIBLE ENCROACHMENTS

Kenneth W. White

COMMONWEALTH OF VIRGINIA
KENNETH W WHITE
LICENSE NO.
1277 B
LAND SURVEYOR

CASE NAME

CROSSLAND & ANK - LEWIS

GARY W. LONERGAN

ALEXANDRIA SURVEYS INC.
6343 SOUTH KINGS HIGHWAY
ALEXANDRIA, VIRGINIA 22306
703 660-6615
FAX 703-768-7764

#9243543