Docket Item # 4
BAR CASE # 2012-0148

BAR Meeting
June 6, 2012

ISSUE: Certificate of Appropriateness – Deck Construction

APPLICANT: Michael Dyke

LOCATION: 614 South Saint Asaph Street

ZONE: RM / Residential

STAFF RECOMMENDATION: Staff recommends approval of the Certificate of Appropriateness application with the following condition:

1. That the beam and support columns on the east side of the deck be pulled forward to the face of the deck and that a simple, Colonial Revival style wood capitol and base be applied to give the appearance of a traditional square porch column, with final design approval by Staff; and
2. That a lattice or trellis privacy screen be constructed on the north side of the deck, integrated with the handrail design, with the final design to be approved by Staff prior to approval of the building permit.

*EXPIRATION OF APPROVALS NOTE: In accordance with Sections 10-106(B) and 10-206(B) of the Zoning Ordinance, any official Board of Architectural Review approval will expire 12 months from the date of issuance if the work is not commenced and diligently and substantially pursued by the end of that 12-month period.

**BUILDING PERMIT NOTE: Most projects approved by the Board of Architectural Review require the issuance of one or more construction permits by Building and Fire Code Administration (including signs). The applicant is responsible for obtaining all necessary construction permits after receiving Board of Architectural Review approval. Contact Code Administration, Room 4200, City Hall, 703-838-4360 for further information.

GIBBON ST
S SAINT ASAPH ST
614
SITE
S PITT ST
FRANKLIN ST
CASE BAR2012-0148
N
W
E
S

I. <u>ISSUE</u>:
The applicant is requesting approval of a Certificate of Appropriateness to construct a new, wood deck measuring 18' x 12' x 14'- 6" at the rear of 614 South Saint Asaph Street. The deck will be painted or stained and surrounded with an inset picket balustrade.

II. <u>HISTORY</u>:
This three-bay two-story brick and CMU block Colonial Revival style dwelling has a side gable roof. Real estate assessment records indicate the house was built in **1960**. The existing house is located on the north property line abutting 612 South Saint Asaph Street and is joined to the neighboring building on the south side by an abutting wall.

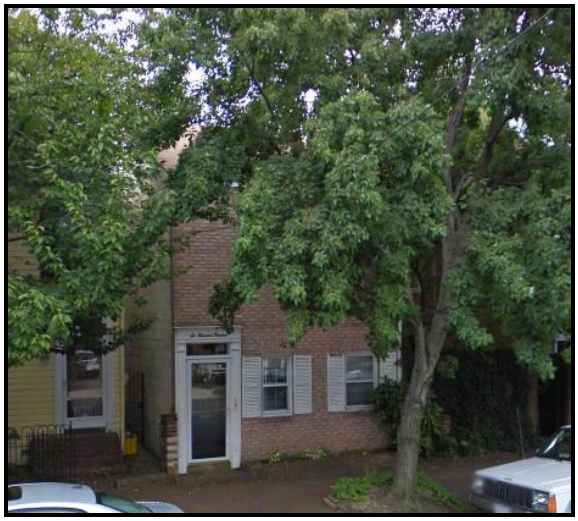

Front elevation View of 614 South Saint Asaph Street

Previous Approvals:
On March 4, 2008, Staff administratively approved the replacement of the existing asphalt shingle roof (BLD2008-0499).

III. <u>ANALYSIS</u>:
The proposed deck complies with zoning requirements for open space and FAR. The *Design Guidelines* state that "Decks should be made of materials which are sympathetic to the building materials generally found in the historic districts (ie. painted wood) and should generally be painted the predominant color of the building or the color of the trimwork." Furthermore, "decks constructed of unpainted pressure treated wood are strongly discouraged."

The rear of the subject house is set farther from the alley than most of the houses on this block, leaving a relatively large rear yard. There are no architectural features on the existing house that would be obscured by the proposed deck and the Board commonly reviews and approves similar requests for rear decks. In Staff's opinion, the proposed rear deck meets the architectural requirements of the *Design Guidelines* for a 1960 Colonial Revival house and is typical of decks constructed throughout the historic district. The deck will be constructed of painted, pressure treated wood, and will contain a historically appropriate inset picket style balustrade, as previously encouraged by the Board. While minimally visible from the public alley, Staff nevertheless recommends only that the beam and support columns on the east side be pulled forward to the face of the deck and that a simple, Colonial Revival style wood capitol and base be applied to give the appearance of a traditional square porch column, rather than a suburban deck support.

However, Staff notes that the platform of the deck will be constructed eight feet above grade in the back yard and will be visible from the rear public alley. The adjoining neighbor has expressed concern about the resulting reduced privacy for their abutting windows and yard and their letter is included in the Board's packet. Staff suggests that a lattice or trellis on the north side of the deck, integrated with the handrail design, may increase visual privacy for both properties. Staff is happy to work with both of the neighbors on a simple screen design, if so directed by the Board at the hearing.

Staff otherwise finds that the current deck design is consistent with the Board's Guidelines and policies and recommends that the Board approve the application, as amended, with the suggestion that the applicant work with Staff on possible screening to mitigate the deck's privacy impacts on the neighbor.

STAFF:
Al Cox, FAIA, Manager, Historic Preservation Section, Planning & Zoning

IV. CITY DEPARTMENT COMMENTS:
Legend: C - code requirement R - recommendation S – suggestion F- finding

Code Administration

F-1 The review by Code Administration is a preliminary review only. Once the applicant has filed for a building permit, code requirements will be based upon the building permit plans. If there are any questions, the applicant may contact Ken Granata, Acting Plan Review Supervisor at ken.granata@alexandriava.gov or 703-746-4193.

S-1 A simple span deck maybe constructed using the City of Alexandria "Deck Details Guide". Upon submission for a building permit it is recommended a note be provided on the construction documents stating this guide will be used.

C-1 Building and electrical permits are required for this project. Five sets of *construction documents* that fully detail the construction as well as layout and schematics of the mechanical and electrical systems shall accompany the permit application(s). If a design professional prepares drawings for the project the plans must bear the seal of the design professional in accordance with the Code of Virginia Section 54.1-410B.

C-2 New construction must comply with the current edition of the Uniform Statewide Building Code (USBC).

C-3 Any proposed future alterations to the existing structure must comply with the current edition of the Uniform Statewide Building Code (USBC).

C-4 Before a building permit can be issued on any proposed future alterations, a certification is required from the owner or owner's agent that the building has been inspected by a licensed asbestos inspector for the presence of asbestos.

C-5 Stairs must comply with the Virginia Residential Code Section R311.7. A maximum riser height of 8-1/4 inches and minimum depth tread of 9 inches. Handrails shall be installed on at least one side for a continuous run of treads or flight with four or more risers.

Handrail height shall be a minimum of 34 inches and a maximum of 38 inches from the sloped plane of the adjoining tread noses.

C-6 Electrical wiring methods must comply with the 2009 Virginia Residential Code.

Transportation and Environmental Services (T&ES)

RECOMMENDATIONS

R1. Applicant shall be responsible for repairs to the adjacent city right-of-way if damaged during construction activity. (T&ES)

R2. No permanent structure may be constructed over any existing private and/or public utility easements. It is the responsibility of the applicant to identify any and all existing easements on the plan. (T&ES)

FINDINGS

F1. After review of the information provided, an approved grading plan is not required at this time. Please note that if any changes are made to the plan it is suggested that T&ES be included in the review. (T&ES)

F2. The Alley at the rear of the property is a Public Right-of-Way. The alley shall not be used for construction or obstructed at any time without approval. (see Code Requirement C-5) (T&ES)

CITY CODE REQUIREMENTS

C-1 The applicant shall comply with the City of Alexandria's Solid Waste Control, Title 5, Chapter 1, which sets forth the requirements for the recycling of materials (Sec. 5-1-99). (T&ES)

C-2 The applicant shall comply with the City of Alexandria's Noise Control Code, Title 11, Chapter 5, which sets the maximum permissible noise level as measured at the property line. (T&ES)

C-3 Roof, surface and sub-surface drains be connected to the public storm sewer system, if available, by continuous underground pipe. Where storm sewer is not available applicant must provide a design to mitigate impact of stormwater drainage onto adjacent properties and to the satisfaction of the Director of Transportation & Environmental Services. (Sec.5-6-224) (T&ES)

C-4 All secondary utilities serving this site shall be placed underground. (Sec. 5-3-3) (T&ES)

C-5 Any work within the right-of-way requires a separate permit from T&ES. (Sec. 5-2) (T&ES)

V. ATTACHMENTS

1 – Supporting Materials
2 – Application BAR2012-00148 at 614 S Saint Asaph St

614 S. St. Asaph St. Deck Project Photos

Existing Rear elevation

Deck several doors to the left of subject property

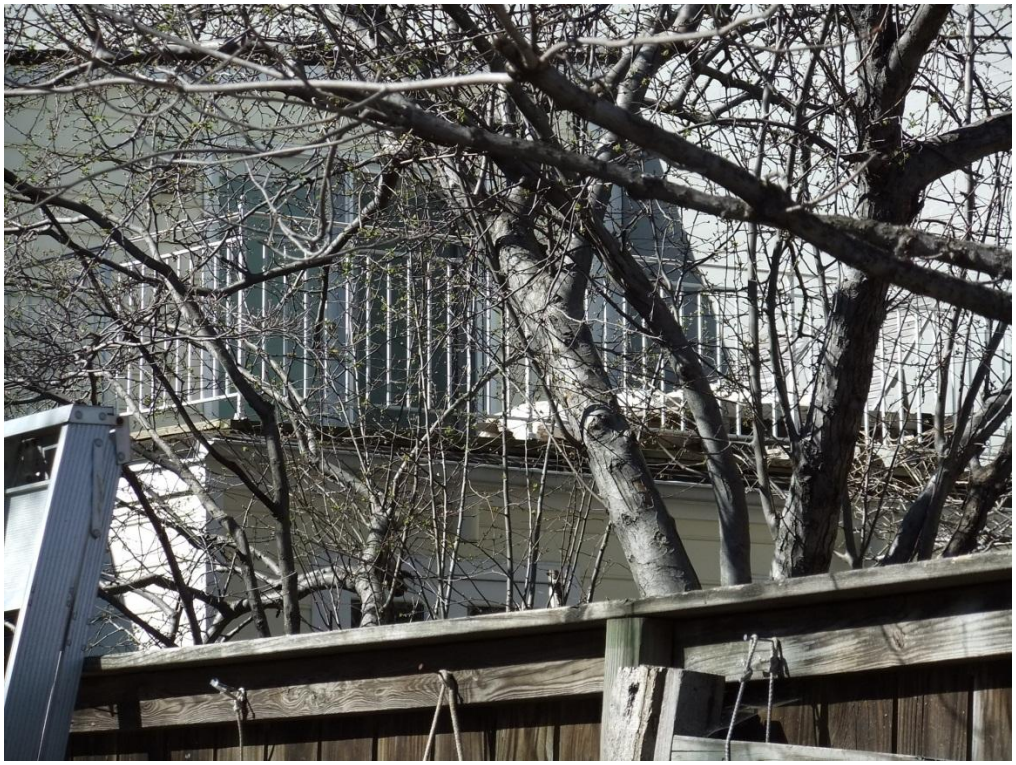

Deck several doors to the right of subject property

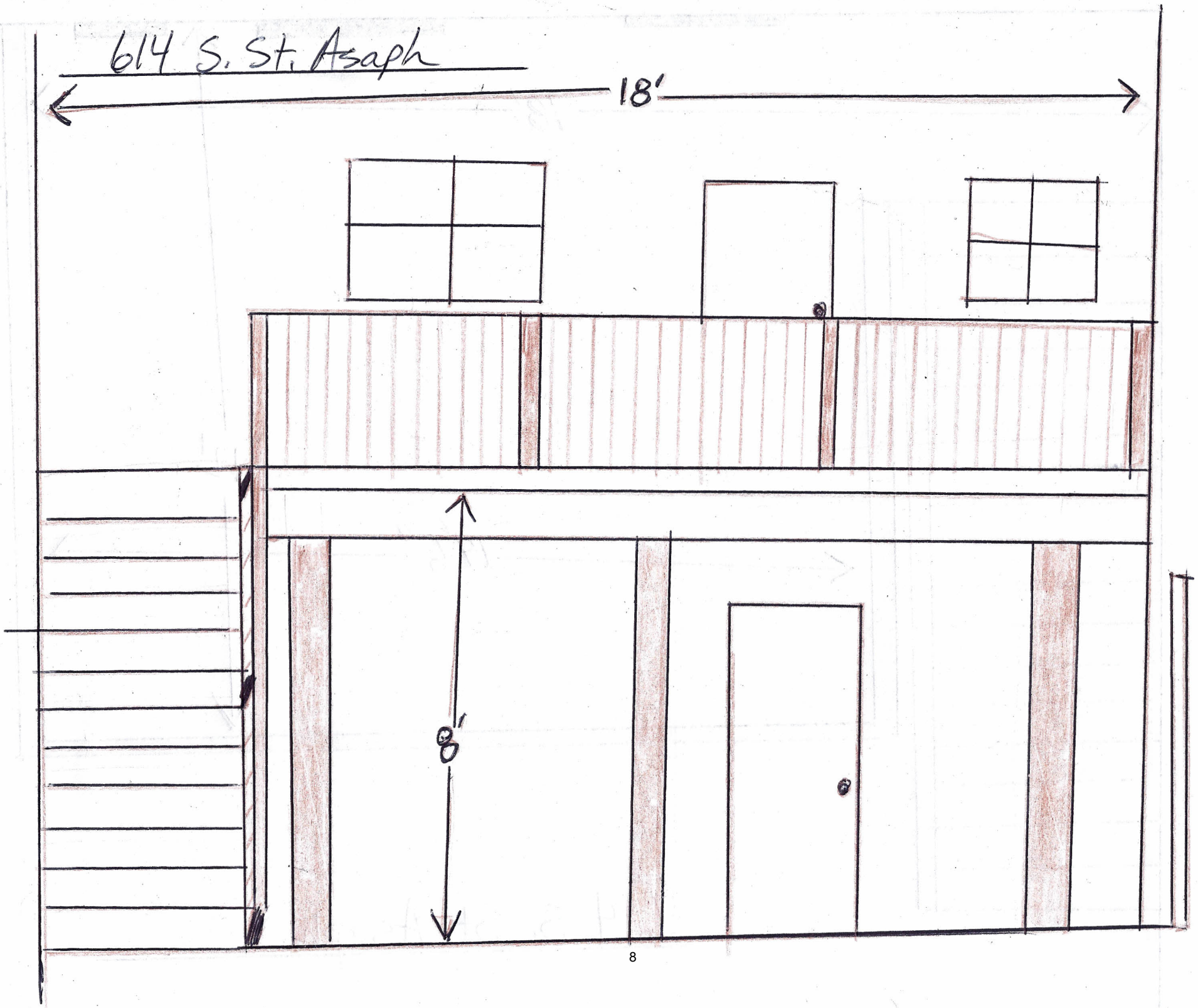
614 S. St. Asaph
18'
8'

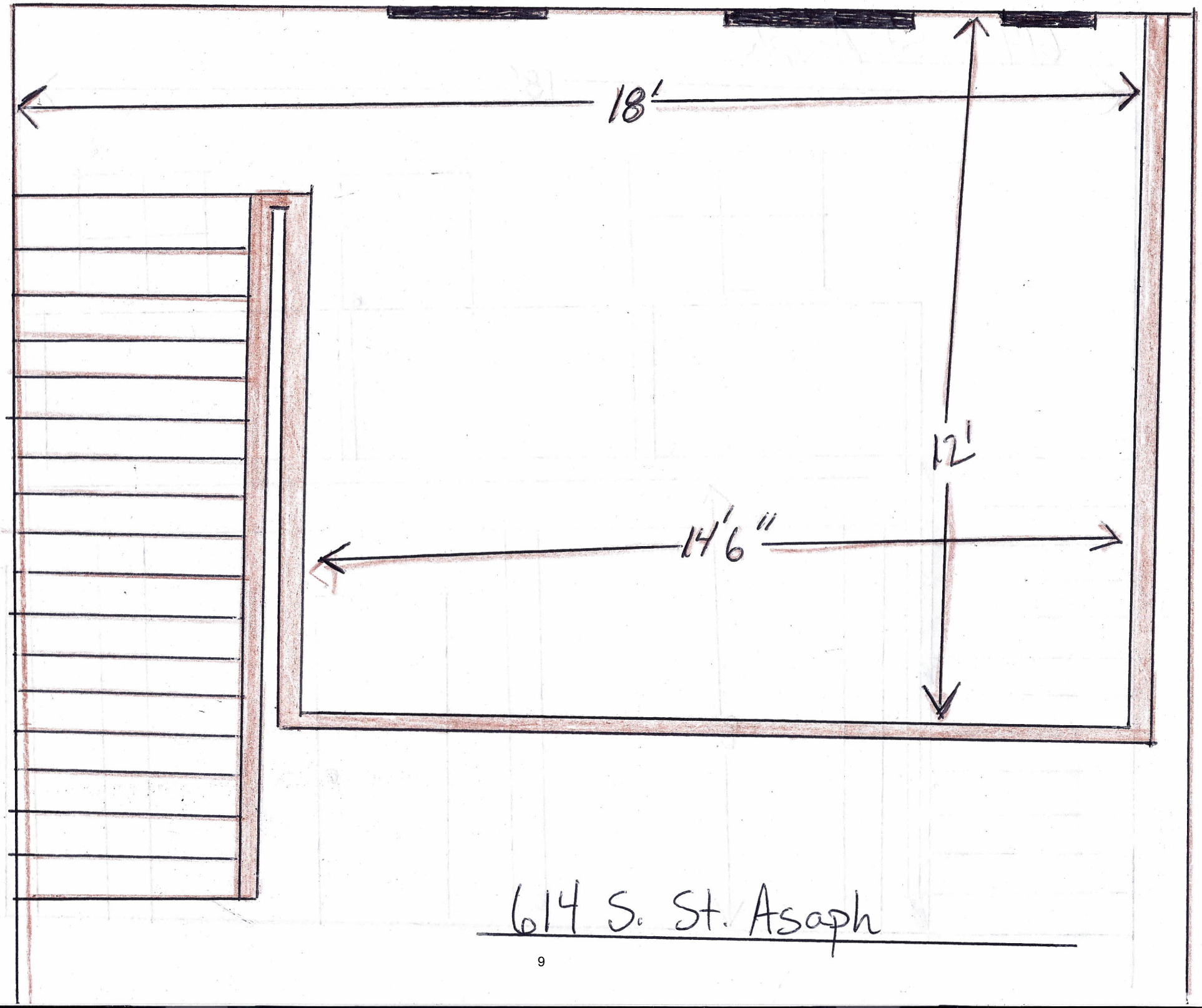

614 S. St. Asaph

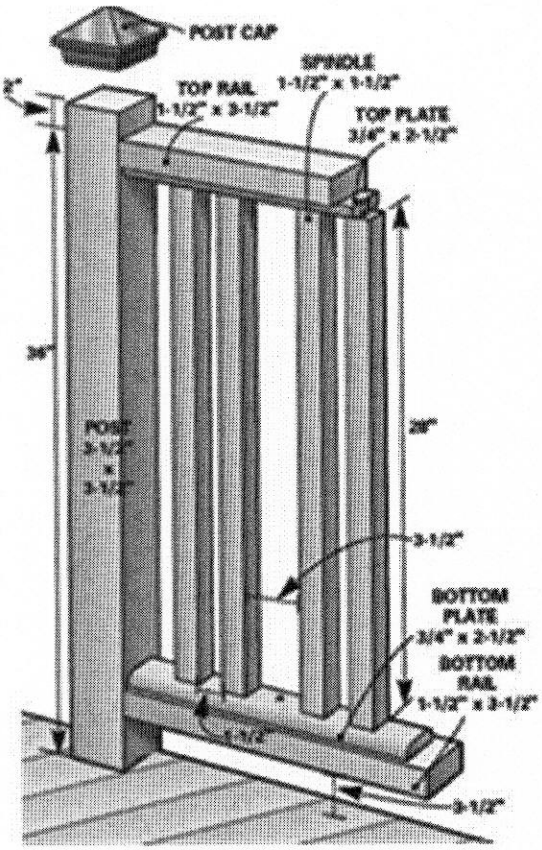

Deck railing to be substantially similar to this detail

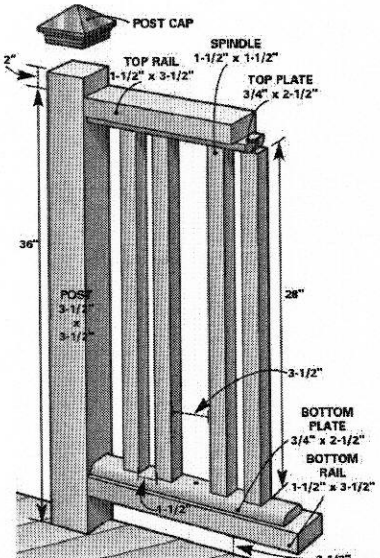

Deck layout diagram

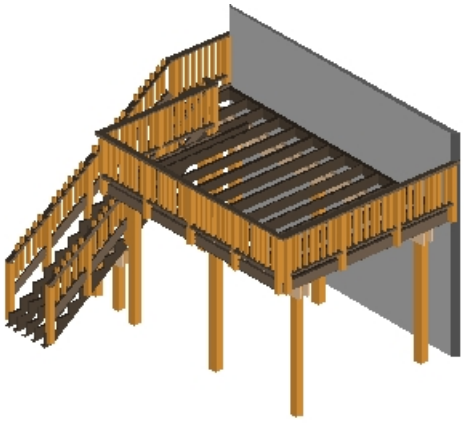

Top view without planks

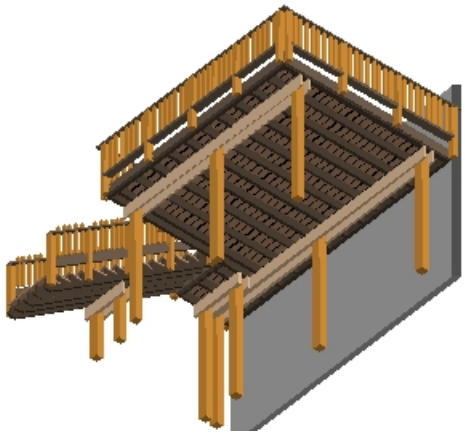

Bottom view with planks

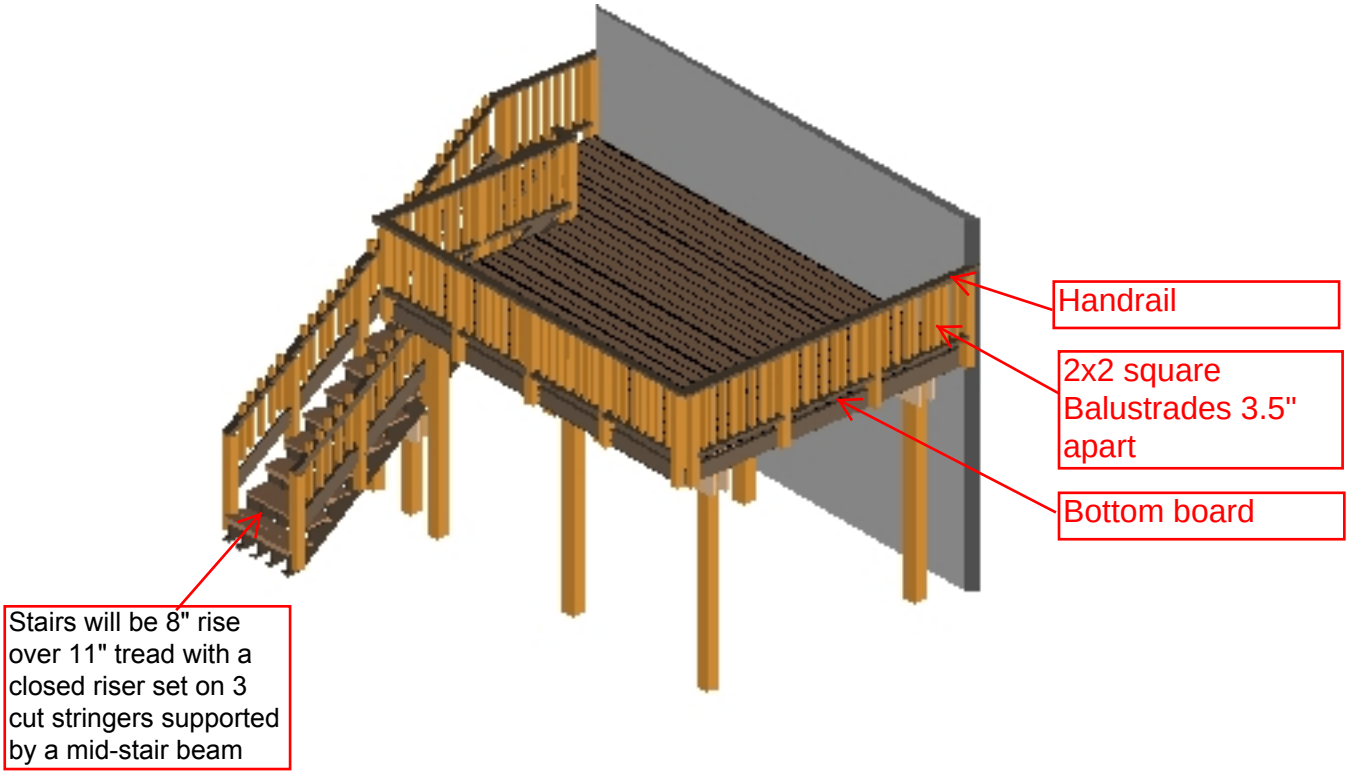

Top view with planks

Attachment 2

BAR Case # 2012-00148

ADDRESS OF PROJECT: 614 S. St. Asaph St.

TAX MAP AND PARCEL: 080.02-03-18 **ZONING:** RM

APPLICATION FOR: *(Please check all that apply)*

☐ CERTIFICATE OF APPROPRIATENESS

☐ PERMIT TO MOVE, REMOVE, ENCAPSULATE OR DEMOLISH
(Required if more than 25 square feet of a structure is to be demolished/impacted)

☐ WAIVER OF VISION CLEARANCE REQUIREMENT and/or YARD REQUIREMENTS IN A VISION CLEARANCE AREA (Section 7-802, Alexandria 1992 Zoning Ordinance)

☐ WAIVER OF ROOFTOP HVAC SCREENING REQUIREMENT
(Section 6-403(B)(3), Alexandria 1992 Zoning Ordinance)

Applicant: ☑ Property Owner ☐ Business *(Please provide business name & contact person)*

Name: Michael Dyke

Address: 604 S. Fairfax St.

City: Alexandria State: VA Zip: 22314

Phone: (703) 548-8309 E-mail : Mike@TheDykeFamily.com

Authorized Agent *(if applicable)*: ☐ Attorney ☐ Architect ☐ _____

Name: _____ Phone: (703) 548-8309

E-mail: _____

Legal Property Owner:

Name: Michael Dyke and Deborah Ceccoli-Dyke

Address: 614 S. Fairfax St.

City: Alexandria State: VA Zip: 22314

Phone: (703) 548-8309 E-mail: Mike@TheDykeFamily.com

☑ **Yes** ☐ **No** Is there an historic preservation easement on this property?
☐ **Yes** ☐ **No** If yes, has the easement holder agreed to the proposed alterations?
☐ **Yes** ☑ **No** Is there a homeowner's association for this property?
☐ **Yes** ☐ **No** If yes, has the homeowner's association approved the proposed alterations?

If you answered yes to any of the above, please attach a copy of the letter approving the project.

BAR Case # 2012-00148

NATURE OF PROPOSED WORK: *Please check all that apply*

- [x] NEW CONSTRUCTION
- [ ] EXTERIOR ALTERATION: *Please check all that apply.*
  - [ ] awning
  - [ ] fence, gate or garden wall
  - [ ] HVAC equipment
  - [ ] shutters
  - [ ] doors
  - [ ] windows
  - [ ] siding
  - [ ] shed
  - [ ] lighting
  - [ ] pergola/trellis
  - [ ] painting unpainted masonry
  - [ ] other _____
- [x] ADDITION
- [ ] DEMOLITION/ENCAPSULATION
- [ ] SIGNAGE

DESCRIPTION OF PROPOSED WORK: *Please describe the proposed work in detail (Additional pages may be attached).*

Build 18x12 foot wood deck on rear 2nd floor.

SUBMITTAL REQUIREMENTS:

Items listed below comprise the **minimum supporting materials** for BAR applications. Staff may request additional information during application review. Please refer to the relevant section of the *Design Guidelines* for further information on appropriate treatments.

Applicants must use the checklist below to ensure the application is complete. Include all information and material that are necessary to thoroughly describe the project. Incomplete applications will delay the docketing of the application for review. Pre-application meetings are required for all proposed additions. All applicants are encouraged to meet with staff prior to submission of a completed application.

Electronic copies of submission materials should be submitted whenever possible.

Demolition/Encapsulation : *All applicants requesting 25 square feet or more of demolition/encapsulation must complete this section. Check N/A if an item in this section does not apply to your project.*

	N/A	
[ ]	[x]	Survey plat showing the extent of the proposed demolition/encapsulation.
[ ]	[x]	Existing elevation drawings clearly showing all elements proposed for demolition/encapsulation.
[ ]	[x]	Clear and labeled photographs of all elevations of the building if the entire structure is proposed to be demolished.
[ ]	[x]	Description of the reason for demolition/encapsulation.
[x]	[ ]	Description of the alternatives to demolition/encapsulation and why such alternatives are not considered feasible.

BAR Case # 2012-00148

Additions & New Construction: *Drawings must be to scale and should not exceed 11" x 17" unless approved by staff. All plans must be folded and collated into 12 complete 8 1/2" x 11" sets. Additional copies may be requested by staff for large-scale development projects or projects fronting Washington Street. Check N/A if an item in this section does not apply to your project.*

	N/A	
☑	☐	Scaled survey plat showing dimensions of lot and location of existing building and other structures on the lot, location of proposed structure or addition, dimensions of existing structure(s), proposed addition or new construction, and all exterior, ground and roof mounted equipment.
☑	☐	FAR & Open Space calculation form.
☑	☐	Clear and labeled photographs of the site, surrounding properties and existing structures, if applicable.
☑	☐	Existing elevations must be scaled and include dimensions.
☑	☐	Proposed elevations must be scaled and include dimensions. Include the relationship to adjacent structures in plan and elevations.
☑	☐	Materials and colors to be used must be specified and delineated on the drawings. Actual samples may be provided or required.
☐	☑	Manufacturer's specifications for materials to include, but not limited to: roofing, siding, windows, doors, lighting, fencing, HVAC equipment and walls.
☐	☑	For development site plan projects, a model showing mass relationships to adjacent properties and structures.

Signs & Awnings: *One sign per building under one square foot does not require BAR approval unless illuminated. All other signs including window signs require BAR approval. Check N/A if an item in this section does not apply to your project.*

	N/A	
☐	☑	Linear feet of building: Front: _____ Secondary front (if corner lot): _____.
☐	☑	Square feet of existing signs to remain: _____.
☐	☑	Photograph of building showing existing conditions.
☐	☑	Dimensioned drawings of proposed sign identifying materials, color, lettering style and text.
☐	☑	Location of sign (show exact location on building including the height above sidewalk).
☐	☑	Means of attachment (drawing or manufacturer's cut sheet of bracket if applicable).
☐	☑	Description of lighting (if applicable). Include manufacturer's cut sheet for any new lighting fixtures and information detailing how it will be attached to the building's facade.

Alterations: *Check N/A if an item in this section does not apply to your project.*

	N/A	
☐	☑	Clear and labeled photographs of the site, especially the area being impacted by the alterations, all sides of the building and any pertinent details.
☐	☑	Manufacturer's specifications for materials to include, but not limited to: roofing, siding, windows, doors, lighting, fencing, HVAC equipment and walls.
☑	☐	Drawings accurately representing the changes to the proposed structure, including materials and overall dimensions. Drawings must be to scale.
☐	☑	An official survey plat showing the proposed locations of HVAC units, fences, and sheds.
☐	☑	Historic elevations or photographs should accompany any request to return a structure to an earlier appearance.

BAR Case # 2012-00148

ALL APPLICATIONS: *Please read and check that you have read and understand the following items:*

☑ I have submitted a filing fee with this application. (Checks should be made payable to the City of Alexandria. Please contact staff for assistance in determining the appropriate fee.)

☑ I understand the notice requirements and will return a copy of the three respective notice forms to BAR staff at least five days prior to the hearing. If I am unsure to whom I should send notice I will contact Planning and Zoning staff for assistance in identifying adjacent parcels.

☑ I, the applicant, or an authorized representative will be present at the public hearing.

☑ I understand that any revisions to this initial application submission (including applications deferred for restudy) must be accompanied by the BAR Supplemental form and 12 sets of revised materials.

The undersigned hereby attests that all of the information herein provided including the site plan, building elevations, prospective drawings of the project, and written descriptive information are true, correct and accurate. The undersigned further understands that, should such information be found incorrect, any action taken by the Board based on such information may be invalidated. The undersigned also hereby grants the City of Alexandria permission to post placard notice as required by Article XI, Division A, Section 11-301(B) of the 1992 Alexandria City Zoning Ordinance, on the property which is the subject of this application. The undersigned also hereby authorizes the City staff and members of the BAR to inspect this site as necessary in the course of research and evaluating the application. The applicant, if other than the property owner, also attests that he/she has obtained permission from the property owner to make this application.

APPLICANT OR AUTHORIZED AGENT:

Signature: _____

Printed Name: Michael Dyke

Date: 05/01/2012

OWNERSHIP AND DISCLOSURE STATEMENT
Use additional sheets if necessary

1. Applicant. State the name, address and percent of ownership of any person or entity owning an interest in the applicant, unless the entity is a corporation or partnership, in which case identify each owner of more than ten percent. The term ownership interest shall include any legal or equitable interest held at the time of the application in the real property which is the subject of the application.

Name	Address	Percent of Ownership
1. Michael Dyke	604 S. Fairfax St	100
2. Deborah Ceccoli-Dyke	604 S. Fairfax St.	100
3.		

2. Property. State the name, address and percent of ownership of any person or entity owning an interest in the property located at 614 S. St. Asaph St. (address), unless the entity is a corporation or partnership, in which case identify each owner of more than ten percent. The term ownership interest shall include any legal or equitable interest held at the time of the application in the real property which is the subject of the application.

Name	Address	Percent of Ownership
1. Michael Dyke	604 S. Fairfax St.	100
2. Deborah Ceccoli-Dyke	604 S. Fairfax St.	100
3.		

3. Business or Financial Relationships. Each person or entity listed above (1 and 2), with an ownership interest in the applicant or in the subject property is required to disclose **any** business or financial relationship, as defined by Section 11-350 of the Zoning Ordinance, existing at the time of this application, or within the12-month period prior to the submission of this application with any member of the Alexandria City Council, Planning Commission, Board of Zoning Appeals or either Boards of Architectural Review.

Name of person or entity	Relationship as defined by Section 11-350 of the Zoning Ordinance	Member of the Approving Body (i.e. City Council, Planning Commission, etc.)
1. N/A		
2.		
3.		

NOTE: Business or financial relationships of the type described in Sec. 11-350 that arise after the filing of this application and before each public hearing must be disclosed prior to the public hearings.

As the applicant or the applicant's authorized agent, I hereby attest to the best of my ability that the information provided above is true and correct.

05/01/2012 Michael Dyke

Date Printed Name Signature

DEPARTMENT OF PLANNING AND ZONING
FLOOR AREA RATIO AND OPEN SPACE CALCULATIONS

A. Property Information

A1. Street Address 614 S. St. Asaph St. Zone RM

A2. 2042 x 1.5 = 3063

Total Lot Area *Floor Area Ratio Allowed by Zone* *Maximum Allowable Floor Area*

B. Existing Gross Floor Area

Existing Gross Area*		Allowable Exclusions	
Basement		Basement**	
First Floor	693	Stairways**	75
Second Floor	693	Mechanical**	145
Third Floor		Other**	
Porches/ Other		Total Exclusions	
Total Gross *	1386		

B1. Existing Gross Floor Area *
1386 Sq. Ft.
B2. Allowable Floor Exclusions**
220 Sq. Ft.
B3. Existing Floor Area minus Exclusions
1166 Sq. Ft.
(subtract B2 from B1)

C. Proposed Gross Floor Area (does not include existing area)

Proposed Gross Area*		Allowable Exclusions	
Basement		Basement**	
First Floor		Stairways**	
Second Floor		Mechanical**	
Third Floor		Other**	
Porches/ Other	184.5	Total Exclusions	
Total Gross *	184.5		

C1. Proposed Gross Floor Area *
184.5 Sq. Ft.
C2. Allowable Floor Exclusions**
0 Sq. Ft.
C3. Proposed Floor Area minus Exclusions 184.5 Sq. Ft.
(subtract C2 from C1)

D. Existing + Proposed Floor Area

D1. Total Floor Area (add B3 and C3) 1350.5 Sq. Ft.

D2. Total Floor Area Allowed by Zone (A2) 3063 Sq. Ft.

**Gross floor area is the sum of all gross horizontal areas under roof, measured from the face of exterior walls, including basements, garages, sheds, gazebos, guest buildings and other accessory buildings.*

*** Refer to the zoning ordinance (Section2-145(B)) and consult with zoning staff for information regarding allowable exclusions.*

If taking exclusions other than basements, floor plans with excluded areas must be submitted for review. Sections may also be required for some exclusions.

F. Open Space Calculations

Existing Open Space	1364
Required Open Space	1072
Proposed Open Space	1180

The undersigned hereby certifies and attests that, to the best of his/her knowledge, the above computations are true and correct.

Signature: _____ Date: 05/01/2012

Updated July 10, 2008